# INSTRUCTIONS BOOK

# SECTION BENDING MACHINE

# MC550CNC

**NS: 2024-162**




**PRADA NARGESA, S.L**
Ctra. de Garrigàs a Sant Miquel s/n · 17476 Palau de Santa Eulàlia (Girona) SPAIN
Tel. +34 972568085 · nargesa@nargesa.com · www.nargesa.com

# NARGESA CLIENTS

Prada Nargesa has more tan 8.000 customers around the world. Some of our clients, those who offer service to third parties with the Nargesa machinery in their workshops, have been pleased to be part of this network that aims to connect them with posible future clients. In this way, all those people or companies that have a need for any part or tool that can be manufactured by using the Nargesa range of machinery, will be able to find a solution in their área to be able to satisfy their production requirements by hiring their services.




**We have more than 8.500 customers in 150 different countries around the world**

Discover its location on the interactive map on our website!

## DO YOU WANT TO PARTICIPATE?

Send an email to nargesa@nargesa.com, include the following information and we will add you to this list.
We want to encourage all those who haven't participated yet in this great comercial network!

1. Company name
2. CIF/Tax Code
3. City
4. Country
5. Machine or machines

# PRADA NARGESA

Prada Nargesa S.L. is a family business fonuded in 1970 located near Barcelona, Spain, with more tan 50 years of experience in the sector of manufacturing of industrial machinery, and more tan 10.000m$^2$ of facilities. Nargesa is a symbol of quality, reliability, warranty and innovation.

Our whole range of machines and accessories is manufactured entirely in Nargesa. We have a constant stock of 400 machines, and we have more tan 16.800 machines sold all over the world.



## OUR RANGE OF MACHINERY

Ironworker Machines
Ring Roller Bender and Pipe Bender
Non-mandrel Tube and Pipe Bender
Twisting / Scroll Bending Machines
Horizontal Press Brakes
End Wrought Iron Machines
Gas Forges

Iron Embossing Machines
Hydraulic Shear Machines
Hydraulic Press Brakes
Presses for Locks
Broaching Machines
Power Hammers

# CERTIFICATES

Prada Nargesa has several certifications that backup both, the design and manufacturing processes, as well as the journey through exporting our products around the world and the quality of the manufacturing components we use for our machines. These facts turn into real advantages for our customers:




**AUTHORIZED EXPORTER**

· Faster customs procedures
· Reduction of tariff documentation
· Tariff preferences according to geographical location




**INNOVATIVE SME**

· Development in innovation, design and manufacturing technologies
· Certification and aduit of efficiency in product and service
· Ability to foresee customer needs




**R+D+I MANAGEMENT**

· Manufacturing based on the R+D+I process
· Technological surveillance system

# SUCCESS STORIES

At Prada Nargesa we believe that the testimony of our clients is our best guarantee, and that is why we like to expose some of the success stories that we have witnessed around the world:




Discover its location on the interactive map on our website!

## DO YOU WANT TO PARTICIPATE?

Send an email to nargesa@nargesa.com including the following information and we will add you to our website:

Company name
Testimonial name
Post in the Company
Country
Descriptive text
Photography with the machine

# INDEX

**1. MACHINE DETAILS ..... 4**
1.1. Machine identification details ..... 4
1.2. Dimensions ..... 4
1.3. Description of the machine ..... 4
1.4. Machine part identification ..... 5
1.5. General characteristics ..... 6
1.6. Description of the guards ..... 7
**2. TRANSPTRANSPORT AND STORAGE ..... 8**
2.1. Transport ..... 8
2.2. Storage conditions ..... 8
**3. MAINTENANCE ..... 9**
3.1. Lubrication of moving parts ..... 9
3.2. Machine greasing ..... 9
3.3. Hydraulic oil change ..... 10
3.4. Ckeckup of hydraulic instalation ..... 11
**4. INSTALLATION AND START UP ..... 12**
4.1. Positioning the machine ..... 12
4.2. Dimensions and work area ..... 12
4.3. External permisible conditions ..... 13
4.4. Instructions for connecting to the power supply ..... 13
**5. INSTRUCTIONS FOR USE ..... 14**
5.1. Basic principles for bending ..... 14
5.2. Assembly of the rollers ..... 15
5.3. User guide ..... 16
5.3.1. Frequency Drive Notifications and Alarms ..... 16
5.3.2. Manual Operating Mode ..... 17
5.3.2.1. Speed test ..... 20
5.3.2.2. Creating a sample bar ..... 25
5.3.3. Automatic Operating Mode ..... 30
5.3.3.1. General Data ..... 31
5.3.4. Program Management ..... 34
5.3.5. Creating a New Program step-by-step ..... 36
5.3.6. Creating a new numerical program ..... 41
5.3.6.1. First section ..... 43
5.3.6.2. Creating a curve ..... 43
5.3.6.2.1. Creating a curve in two steps ..... 44
5.3.6.2.2. Creating a pressed curve in several steps ..... 46
5.3.6.2.3. Creating an interpolated curve ..... 47

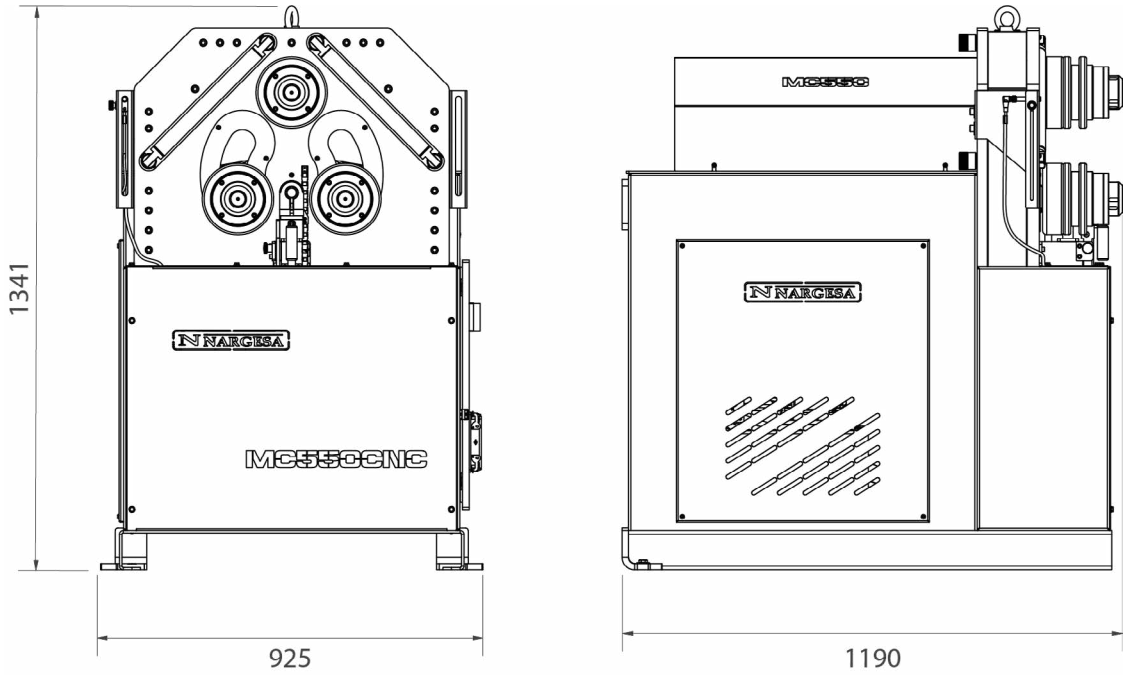
5.3.6.3. Editing steps ..... 49
5.3.6.4. Deleting steps ..... 50
5.3.6.5. General Data ..... 50
5.3.6.6. Returning to a numerical program ..... 50
5.3.7. Production Mode ..... 50
5.3.8. Using materials and tools ..... 54
5.3.9. Importing and Exporting Data ..... 56
5.3.10. Alarm Management ..... 57
5.4. Cleaning the touchscreen ..... 60
5.5. Working position ..... 61
**6. WARNINGS ..... 62**
6.1. Residual hazards ..... 62
6.2. Counter-productive methods ..... 62
6.3. Other recommendations ..... 62
**7. ASSEMBLY OF THE ROLLERS ..... 63**
7.1. Bending capacity ..... 64
**8. OPTIONAL ACCESSORIES ..... 67**

# 1. MACHINE DETAILS

## 1.1. Machine identification details

| | |
|---|---|
| **Trademark** | Nargesa |
| **Type** | CNC section bending machine |
| **Model** | MC550CNC |

## 1.2. Dimensions




*Picture 1. External dimensions of the MC550 bending machine*

## 1.3. Description of the machine

The MC550CNC bending machine is a machine specifically designed for bending profiles, the majority of which are metal, with different thicknesses and configurations, such as solid profiles, pipes, T-profiles, angles...

The bending machine offers a set of standard tools, rollers, to allow the bending of profiles in a range of shapes and sizes. Apart from the standard rollers, the manufacturer also offers different types of additional rollers to produce other types of bending, according to the configuration of the material to be handled, as well as specific rollers for work with stainless steel or aluminium, manufactured with * SUSTARIN for jobs in stainless steel or aluminum avoiding the material to be damaged or scratched.

** Sustarín: Polyoxymethylene, high resistance and high rigid crystalline thermoplastic, low friction and excellent dimensional stability*

**PRADA NARGESA S.L. is not liable for any damage that might occur due to misuse or failure by users to comply with the safety standards.**

## 1.4. Machine part identification

*Bending rollers

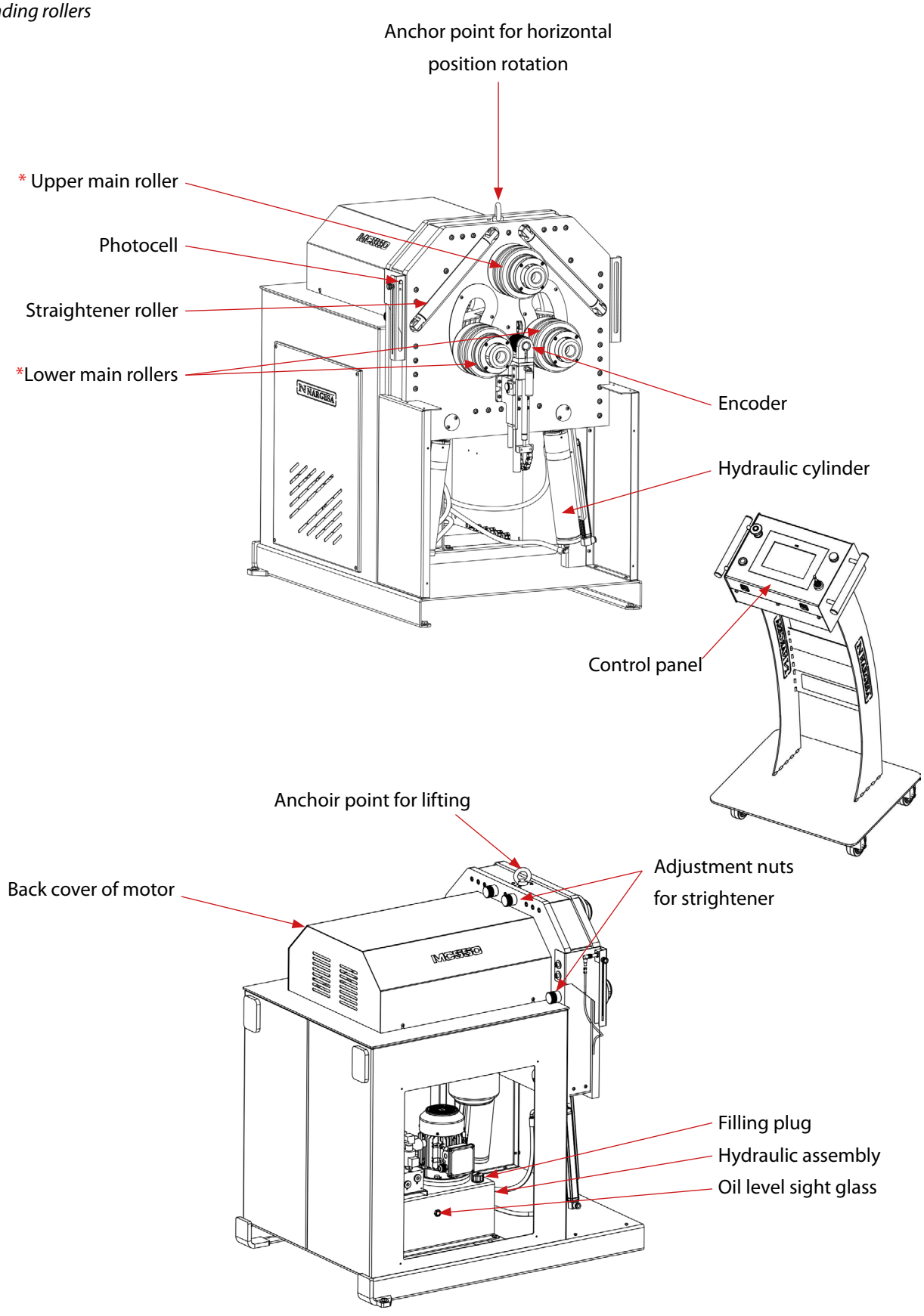





*Figure 2. Nameplate*

## 1.5. General characteristics

| | |
|---|---|
| **Motor power** | 1,5 Kw / 2 CV to 900r.p.m.. |
| **Intensity** | 7 A |
| **Voltage supply** | 220V Single phase 50/60 Hz |
| **Traction** | 3 rollers |
| **Adjunstable rollers speed** | From 3 to 8 r.p.m. |
| **Diameter of rollers** | 170 mm |
| **Diameter of axis** | 50 mm |
| **Useful axis length** | 90 mm |
| **Structure material** | Sheet |
| **Weight** | 840 Kg |
| **Dimensions** | 925x1190x1341 mm |

### Hydraulic unit features

| | |
|---|---|
| **Motor power** | 0.75 Kw/1 CV a 1400 r.p.m. |
| **Intensity** | 3.5 A |
| **Pump** | 1,5 l/min |
| **Work pressure** | 200 Kg/cm2 (20 MPa) |

### 1.6. Description of the guards

The gear motor and all the gears that allow the operation of the machine are located under the main upper cover that protects the mechanisms.

Although the major mobile elements are protected by the upper cover, it is necessary to take special precautions during bending operations in order to avoid entrapment between the rollers and the piece being bent.

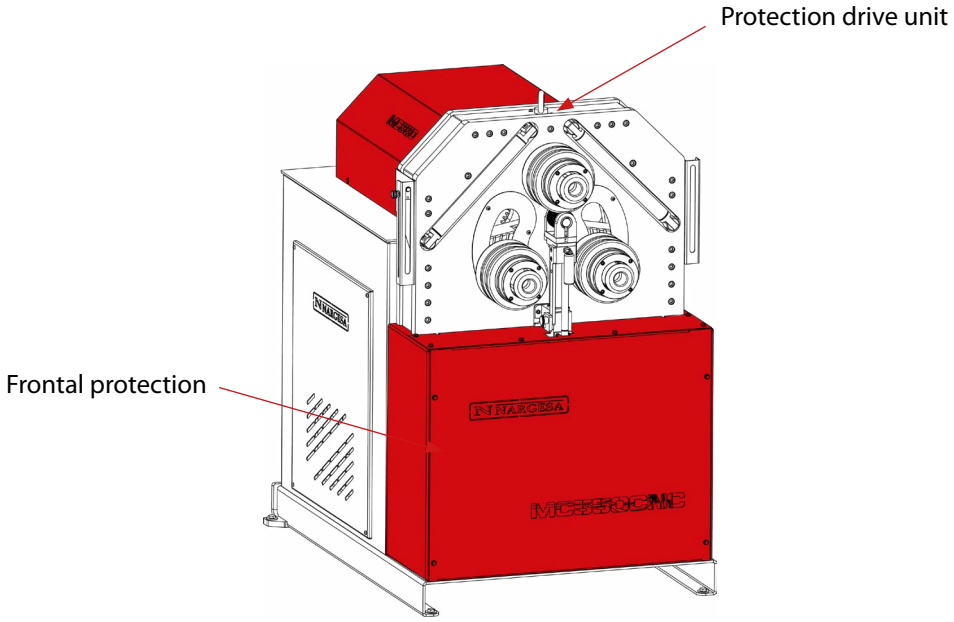



*Figure 3. Mechanism protection guards*

# 2. TRANSPORT AND STORAGE

## 2.1. Transport

There are two ways of carrying out the transportation of the machine:

- From the bottom, through the base of the machine, using a pallet jack or forklift as shown in the illustration. Never raise the machine more than 200 mm from the surface in order to prevent the risk of tipping
- From the top of the machine, from the anchor point designed for this purpose defined in figure 4, using a crane or forklift.

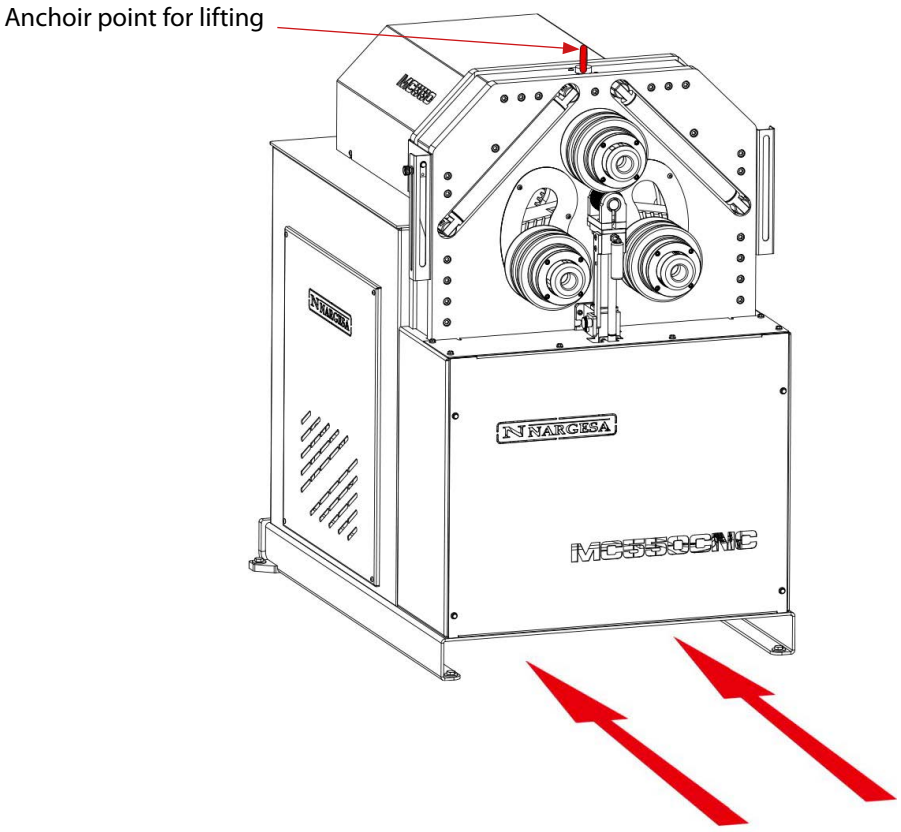



*Figure 4. Transportation of the machine*

## 2.2. Storage Conditions

The bending machine shouldn't be stored in a place that does not meet the following requirements:

- Humidity between 30% and 95%

- Temperature of -25 °C to 55 °C or 75 °C for periods not exceeding 24hrs
(remember that these temperatures are in storage conditions)

- Machines or heavy objects should not be stacked on top

# 3. MAINTENANCE

## 3.1. Lubrication of moving parts

It is advisable to keep clean the machine moving parts, whenever posible, in order to ensure a correct performance and thus make its useful life longer.

In order to lubricate the moving parts of the machine that require lubrication, it's recommended to follow the next instructions:

- Clean the surface to be lubricated with a cotton cloth or a soft rag that does not release any threads. To remove the accumulated grease and any possible residues that have become stuck to it.
- After cleaning, apply grease again on the surface with the help of a grease pump or a spatula for the pinions.
- Spread the grease evenly without creating excesses or clumps.
- Grease the machine periodically according to its use, at the same time the CNC of the machine will warn that it needs maintenance automatically.
- Lubricate the machine regularly, according to use.

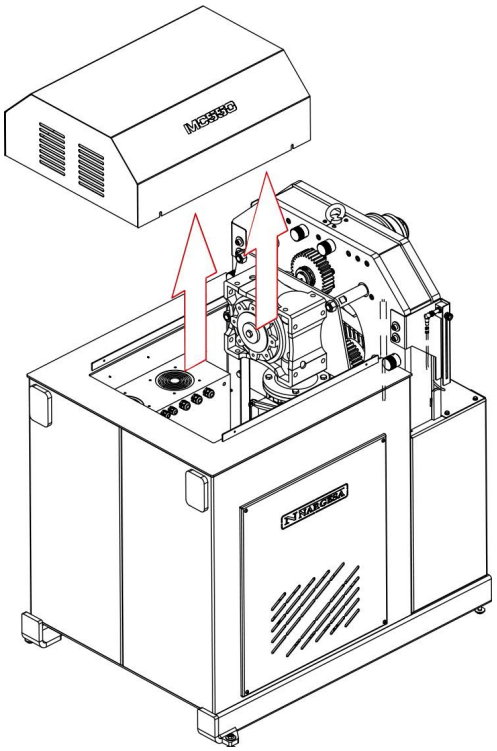
* It is recommended to use lithium grease for the rollers N.850 EP-2.

**CAUTION:** The "Emergency Stop" push button must be pressed and the machine brought to a stop in order to lubricate the machine".

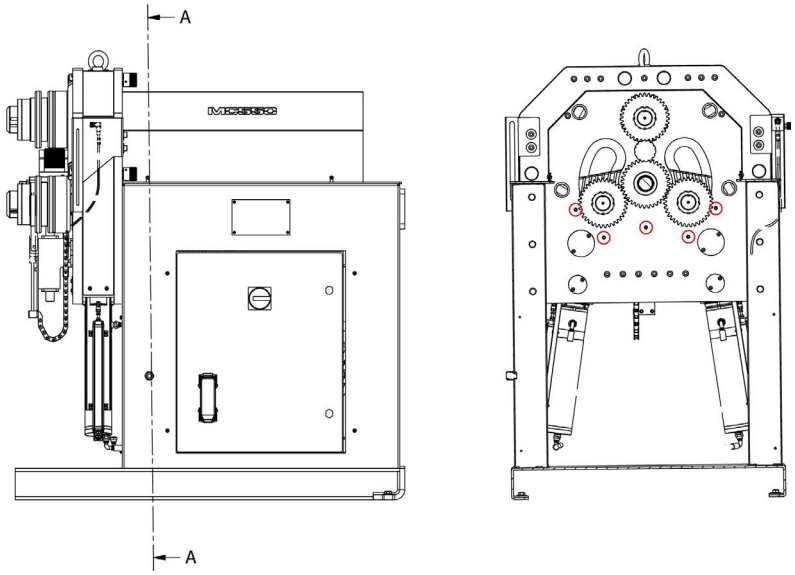
## 3.2. Machine greasing

In order to the machine lubrication:

1. We place the rollers in the lower part
2. We remove the back cover motor protection

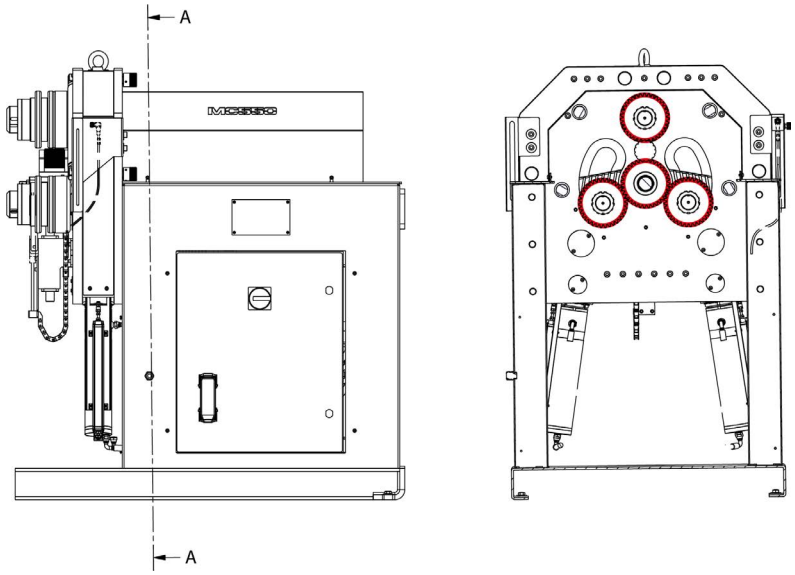


3. We apply grease in all the lubricators.




*Location of grease nipples*

4. We clean and grease the pinions of the machine. After this we turn the rollers in both directions to ensure a good lubrication.



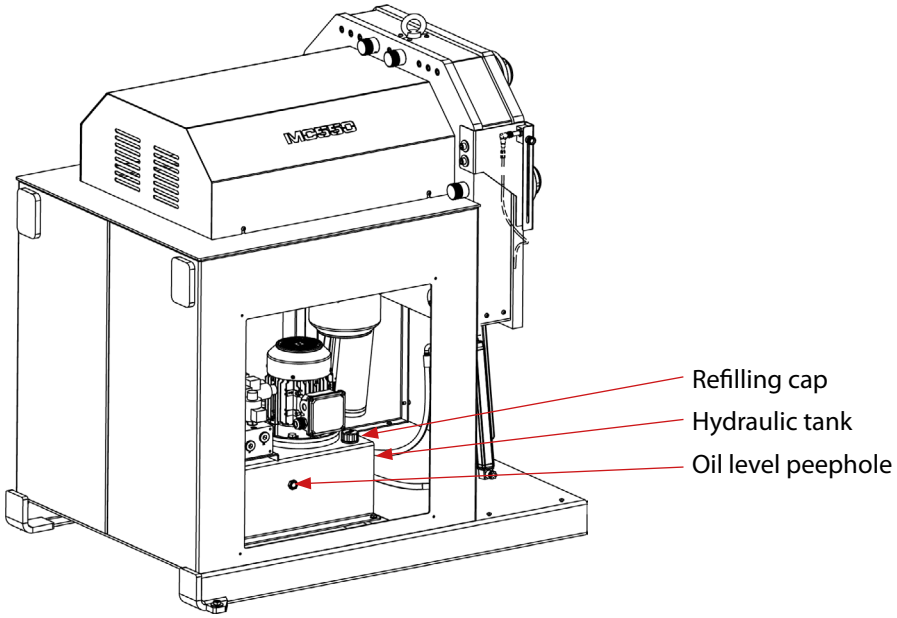

### 3.3. Hydraulic oil change

To replace the hydraulic oil, we recommend to follow the steps below:

- Check the oil level in the tank every 500 hours of use, checkup the oil level in the hydraulic tank located in the base inner side. In order to have a correct information about the oil level, the inner lower rollers must be in their lowest position.
- The oil cap is located at the top of the tank. If it is necessary to add oil, fill to the level of the sight glass at the front of the tank.
- Change the hydraulic oil in the tank every 2000 hours of work or every 5 years.
- Remove the old oil in a tray and dispose of it at the nearest recycling point.

- Fill the tank with new hydraulic oil to the level of the sight glass located at the front. The capacity of the tank is approximately 16 litres.
- Return the hydraulic assembly to its location and secure it to the machine with the bolts.

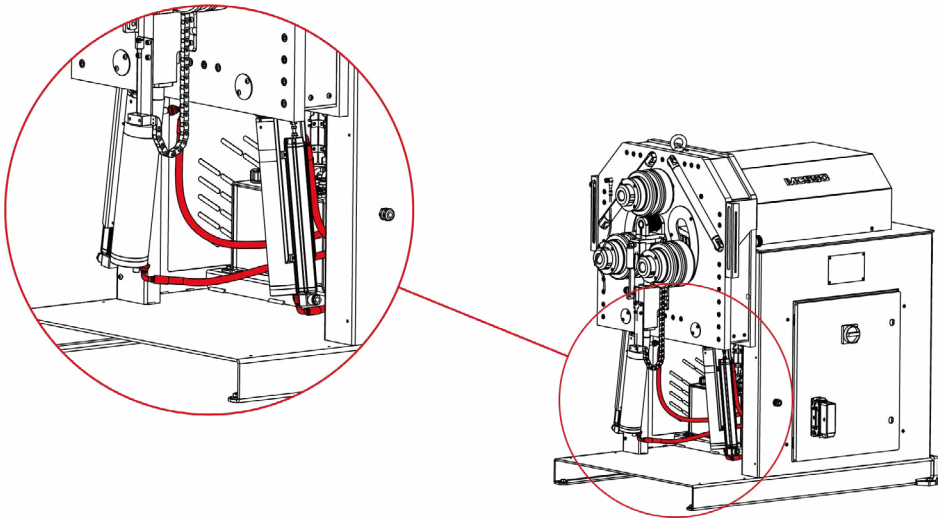
* We recommend the use of CEPSA HIDRÁULICO HM 68 hydraulic oil.




*Identification of the components of the hydraulic set*

### 3.4. Checkup of hydraulic installation

Every 6 months we should make sure there is no arising oil leak in the hoses of the hydraulic circuit.



*Hoses of hydraulic circuit.*

# 4. INSTALLATION AND START UP

## 4.1. Positioning the machine

Locate the machine properly in order to avoid moving it; otherwise, follow the guidelines described in the paragraph transport (no. 2). Must be placed on a flat, level surface to prevent it vibrating and moving during bending operations.
It is optional to fix the machine by the four bolts since it is provided with a lower base or stand with four perforations as it's shown in Figure 5.

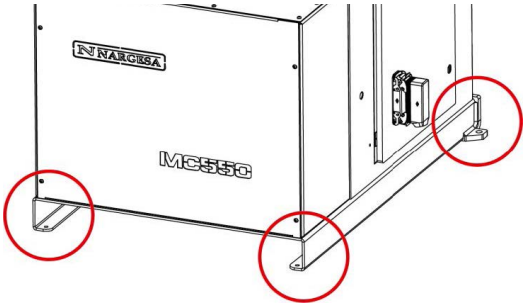



*Figure 5. Anchor points of the machine*

## 4.2. Dimensions and work area

The dimensions must be considered when the machine is being placed, the working area for the operator and the possible lengths of the parts to be worked.
The bending machine can be used by a single operator, who must be directly in the front of the machine to be able to handle the piece being bend with safety, and never on the side.
Prior to commencing the bending operation, with the machine shut down, the operator must adjust the bending rollers, adapting them to the material and the profile to be bent, as shown in paragraph 7, figure 14.

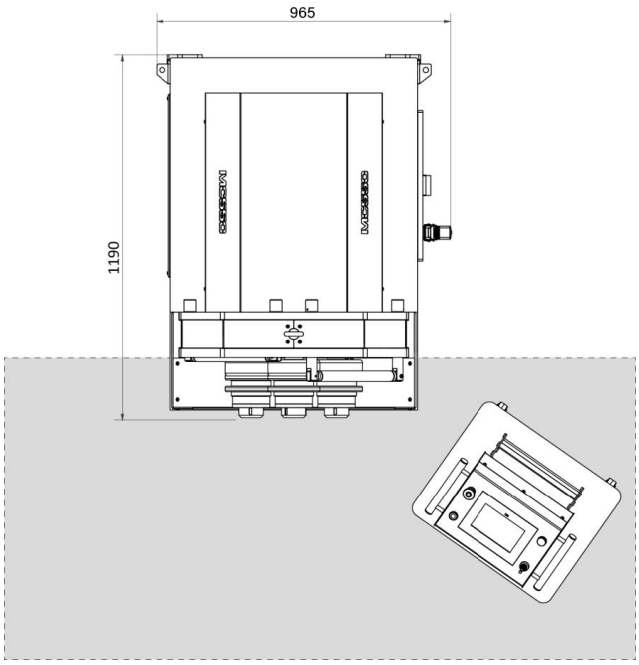



*Figure 6. Operator's working area*

### 4.3. External permissible conditions

It is advisable to work under the following atmospheric conditions:

- Room temperature between +5 °C and +40 ºC without exceeding an average temperature of +35 °C within 24 hrs.
- Humidity between 30% and 90% without water condensation.

### 4.4. Instructions for connecting to the power supply

**IMPORTANT**

**This machine must be connected to an electrical outlet with earthing contact.**

IMPORTANT: This machine must be connected to a 220V socket with grounding contact. We supply the MC550 with two 230V / 400V three-phase motors of 1.5 Kw and 0.75Kw connected in triangle to connect to a 220V power source. It must be connected to a single power source and in the indicated power source. If the line voltage is not the one indicated, the inverters must be replaced if we have to change the voltage, because the frequency inverters of the machine ARE NOT MULTI VOLTAGE.

**Before making any changes to the wiring of the motor bobbins or electrical panel, it is essential to check that the machine is not connected to any power source.**

# 5. INSTRUCTIONS FOR USE

## 5.1. Bending principles

The bending of the different profiles and tubes is carried out by passing the material through the three driven rollers located at the front of the machine. Out of these 3 rollers, there is one fixed, and the remaining two are moveable. In this way and depending on the relative position of these three elements, it is possible to achieve the desired radius.

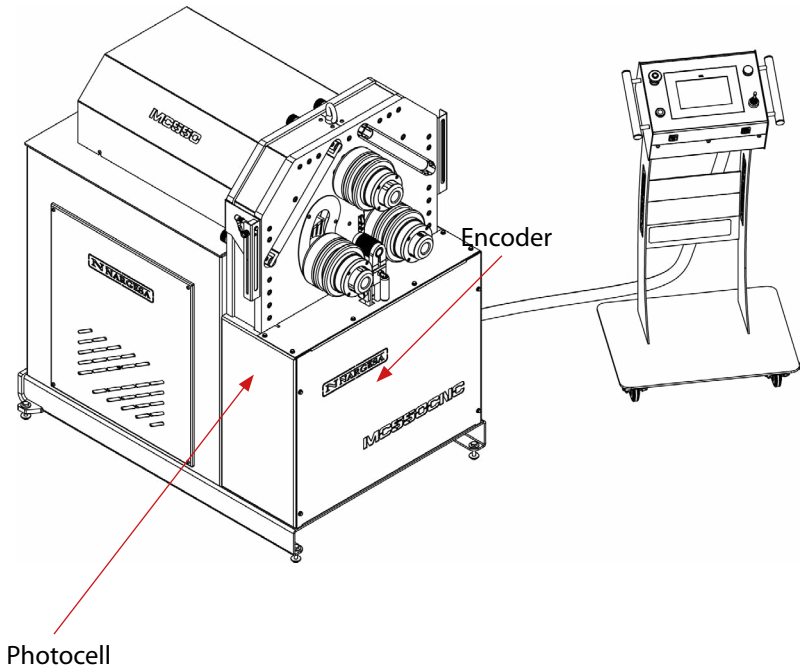
There is a touchscreen control panel to move the rollers mentioned as well as an orange button with a LED and a 4-way joystick. The button and joystick are each located on each side of the control panel and the functions are as follows:

Orange button: this button activates the hydraulic pump in energy savings eco mode. On the other hand, this button must be kept pressed down to position the X, Y and R axes when the target height is established using the touchscreen. In this case, the movement stops and the positioning is cancelled if the button is released before reaching the target axis position. This button is also used when running programs in automatic mode much like already described.

4-way joystick: Activating this joystick to the left or right turns the pull rollers to move the piece in the machine forward or backwards. On the other hand, moving this joystick up or down activates the hydraulic pump (only in energy savings eco mode) and the X and Y axes move negatively or positively, respectively.

This button also has a pilot light indicating when activation is possible. Thus, pressing it with the light off will not give any order to the machine, beyond activating the hydraulic pump if it is stopped (only in energy savings eco mode).

Two key elements are also necessary in order to achieve precise results: the encoder and the material detection photocell.



The encoder reads the position and speed of the R axis (the axis that moves the material to the front or back). Therefore, it is of vital importance that this encoder always be in the reading position when requiring precise movements. In other words, the adequate position thereof requires that it always be in direct contact with the material being bent.

The photocell sensor detects the starting point of the bar of material the bending machine is working on and, thus, determines the exact initial position where the profile must be positioned in order to run programs automatically and always get the same result. It is worth mentioning at this point that the bending machine allows the entry of material from the right and from the left, a change of side only requires two simple steps: placing the photocell on one end or another and informing the bending machine of the side where the material is entering (right or left).

All the necessary information to give orders to the bending machine and receive information from it is done using the touchscreen on the control panel. Using this touchscreen, you can operate the machine manually or automatically by selecting the different pull rollers, creating and running programs, saving and loading programs, entering information on the bends (material, rollers used, heights, widths, thicknesses, radiuses, etc.). Plus, all the alarms and possible errors also appear on this interface which is highly useful for knowing what is happening at all times.

### 5.2. Assembly of the rollers

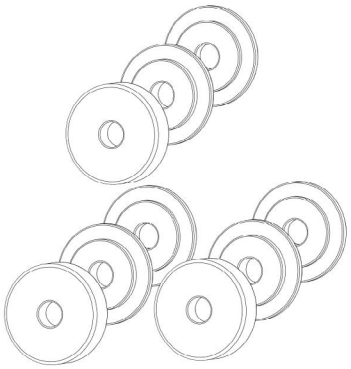


*Figure 12. Position of the rollers in relation to the machine axes*

### 5.3. User guide

A control panel with a multifunction touchscreen is used to operate the MC550 hydraulic pipe bender. The machine can also be controlled with a movement button and a four-way joystick for easier roller positioning. The control panel also features an emergency stop and a voltage indicator light.




1. Multi-purpose touchscreen
2. Movement button
3. Four-way joystick
4. Emergency stop
5. Voltage indicator light

This is largely the man/machine interface. However, reading the steps indicated in the following sections is recommended in order to be able to work with the machine safely and comfortably.

#### 5.3.1. Frequency Drive Notifications and Alarms

Notifications and alarms from the two frequency drives that control the hydraulic pump and the motor that rotates the pull rollers may appear on screen when the physical limits for which the MC550 bending machine was designed are continuously exceeded.

The fact that they may appear in the top message bar on screen does not mean the machine is malfunctioning. It is just a warning not to exceed the mechanical capacities of the MC550 bending machine.

Given the origin, it is not possible to reset these notifications and alarms on the touchscreen which is simply informational in this case. Thus, to proceed correctly when correcting any of these situations, you need to access the electrical cabinet on the side of the machine. If you do so, you may locate the two frequency drives in the center of the electrical panel upon opening the door. (See annex - Electrical cabinet)

To reset these notifications and alarms, you must press the “STOP/RESET” button on the front of the drives.

### 5.3.2. Manual Operating Mode




After turning on the power to the machine ("Power On"), the manual mode graphic interface is displayed on screen.

The active operating mode is identified by the horizontal bar drawn below one of the two central images (automatic and manual) shown in the vertical menu in the right-hand side of the display.

The message bar at the top shows useful information and alarms so the user may know the machine status at all times.

The chosen language identification flag and the current time are shown at the top right.

The layout of the machine rollers along with the current height are shown in the middle of the graphic area above the speed control bar. Plus, the names of the axes enabled (X, Y and R, in the previous image) also appear as superscript in addition to directional arrows along with the signs "-" and "+" to enter the negative and positive directions of the X and Y axes.

The bottom of the screen is reserved for the active mode horizontal menu buttons.

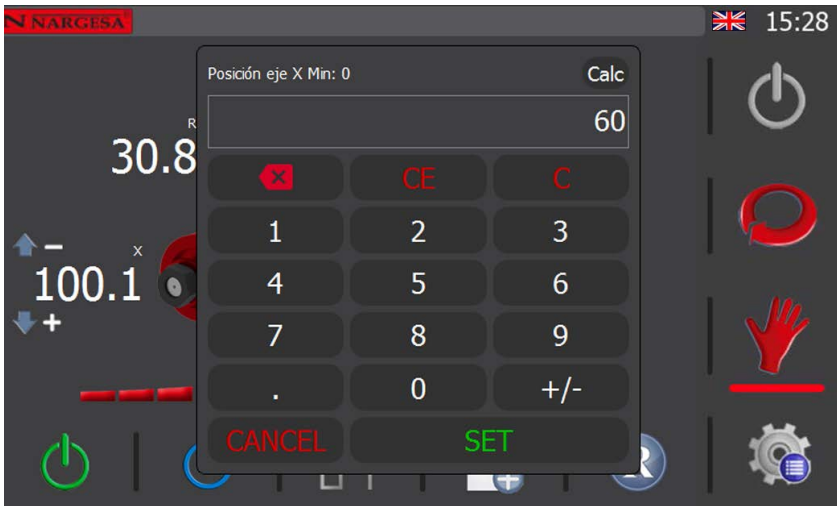
In view of the message that appears at the top, the system must be reset in order to work appropriately. To do so, press the button on the horizontal menu. If you do this, the message will disappear and the movement button indicator light on the front of the control panel will light up.

The bending machine is factory-set in eco energy savings mode to reduce consumption to a minimum when a period of inactivity is detected (5 minutes). This means the hydraulic pump will disconnect after a certain amount of time without being operated. This is normal. Thus, the hydraulic pump will continue to be stopped after the system is reset. Press the icon on the horizontal menu at the bottom to start it simply activate the movement button on the control panel or activate the joystick upwards or downwards.

Of the three rollers arranged in pyramid form on the bender, only the position of the two bottom ones can be changed with the hydraulic activation of the two pistons. Thus, each one of them can be positioned in the exact place for optimal bending. What's more, the three rollers are pull rollers which allows them to also move the material to the front or back accurately due to the use of the position encoder.

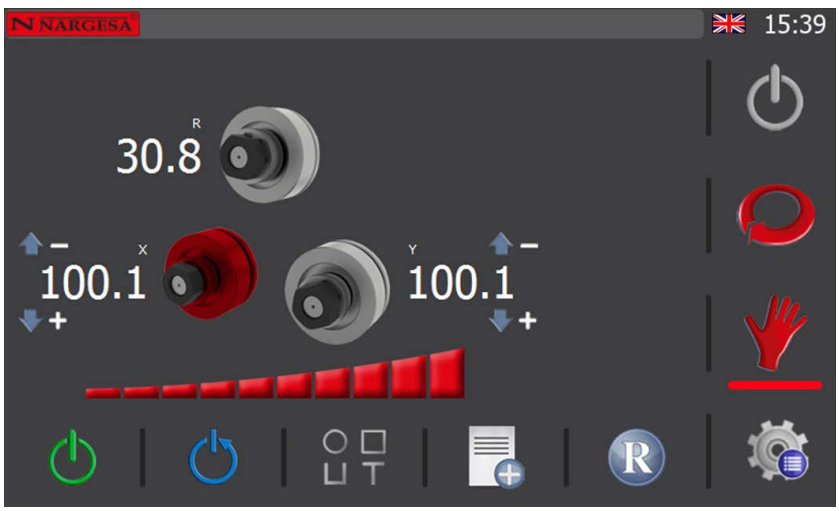
In manual mode, the active roller is highlighted in red. The one on the left (X axis), the one on the right (Y axis) or the upper one (R axis) can be selected simply by pressing the corresponding drawing on the screen. Then, to move it, you just have to move the joystick up and down for the X and Y axes, or right to left for the R axis. While the chosen roller moves physically during this action, you can see on screen how the current height changes.

Plus, you can position either one of these two lower rollers (X and Y) in the desired position by pressing the height of the axis to be moved. Así, por ejemplo, si se quiere colocar el rodillo X en una cota igual a 60.0, no hay más que presionar sobre la cota actual del eje X (100.1), y aparecerá una ventana emergente como la que se muestra a continuación.




Enter the target height using the keypad. It's 60 in the example. Then, press the "SET" key on the screen to confirm and close the window.

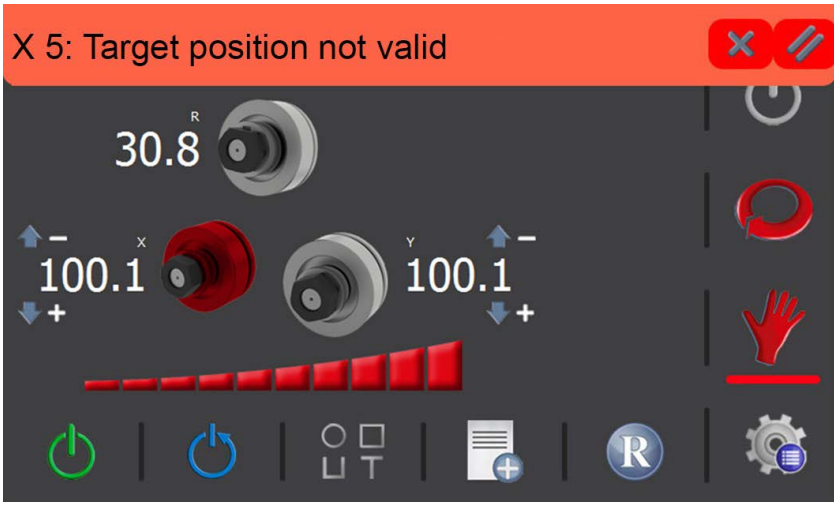
If you do this, the graphic control interface will now show the following image. The target height you just entered is shown below the current height of the X axis roller as a subindex.



Now the machine is in the positioning mode for the X axis roller until the orange movement button located on the front of the control panel is pressed. Therefore, if you keep that button pressed down, the X axis roller will begin moving from the current height (100.1) to reach the target height established (60.0) at which time the positioning mode concludes (the target height on screen disappears).

Once the positioning mode has begun for a roller, it can only be cancelled if the movement button is released before reaching the target height. Doing so will make the target height disappear from the graphic interface, returning to manual operating mode.

On the other hand, an alarm will appear on screen like the one shown below upon pressing the orange button to start the positioning for the selected roller if you enter a target height that is outside the range.




You may delete this alarm by pressing the icon for the bar that set off the alarm or by closing the pop-up window with and then accessing the alarm screen by pressing the icon on the notification bar to see the alarm history.




This shows the alarm history for the machine which can be filtered by date. As shown in the image, the active alarms appear in red. To delete them, you must press the , icon. To exit this screen and return to manual operating mode, you must press the icon.

After this information on alarms and going back to the movement of the axes X and Y in manual operating mode, you must know that if you want more control over the position of each one of these rollers, you can use the speed control for help. This is shown on screen with this icon  under the rollers.
Reducing the speed is recommended for precise X and Y roller positioning. This is done by pressing on the desired segment of the aforementioned bar, which will then reflect the new percentage out of the total.



**Speed at 10%**



**Speed at 50%**



**Speed at 100%**

Besides the hydraulic movement of rollers X and Y which can change the pyramidlike triangle geometry of the machine for different bend radiuses, the MC550 allows synchronized rotation of the three pull rollers for optimal bending on the pieces to be produced.

As already briefly mentioned, move the joystick to the right or left to do so. In this case, it doesn't matter which roller is selected. Los tres girarán en la dirección deseada de forma simultánea.

Likewise, as seen with the movement of rollers X and Y upwards and debajo downwards, you can now use the speed bar to increase or reduce the rotation speed.

To do so, choose the right speed percentage as was done before by directly touching the speed bar on the screen and bend the piece using the pulsador de movimiento y el directional joystick.

### 5.3.2.1. Speed test

With the knowledge acquired so far you are able to manually move the X, Y and R axes. In addition, you know how to position the X and Y axes in a desired absolute position. What we are going to explain at this point is how to perform R-axis movements (traction rollers) accurately.

The first thing you should know is that precise R-axis movement requires the position encoder. This element is of vital importance since it is in charge of measuring both the speed and the position of the shaft. So, whenever precise movement of the R-axis is required, we must be sure to place the encoder in the read position once we have the material clamped. If we forget to place the encoder in the reading position, errors will appear on the screen and the movements will not be performed correctly.

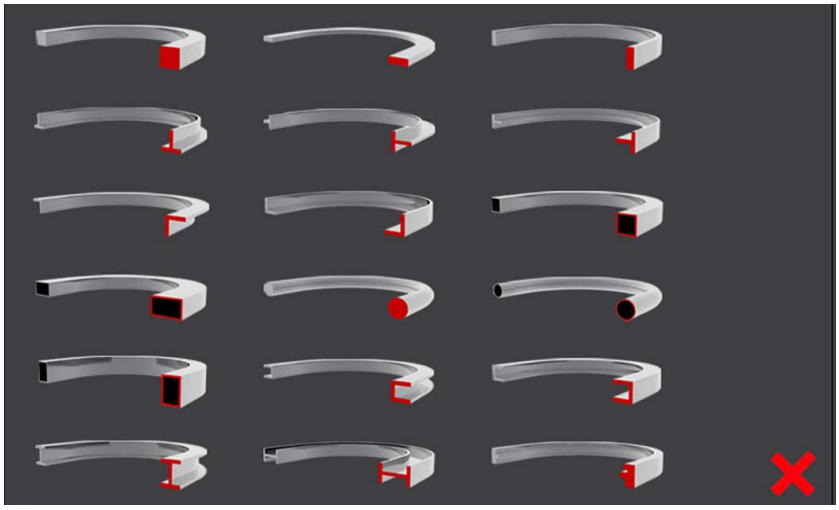
The second important point to mention is the relationship between the speed of rotation of the three traction rollers and the linear feed speed of the material. In order not to go into technical explanations that will not be useful, let's summarize it as follows:

1.- The larger the diameter of the roller, the higher the material feed speed.
2.- The smaller the diameter of the roller, the lower the feed rate of the material.

What we want is that the machine performs the work as quickly as possible and, since, for ease of use, the bending machine is not told in any way the dimensions of the rolls that we place, it is necessary for it to determine the maximum speed at which it can work, automatically. This is done by means of a speed test.

This speed test makes it possible to define the maximum speeds for each type of material, which means that it is closely related to the general data of the profile used. In other words, each different material to be bent needs its own speed test.

To proceed appropriately, the first thing you have to do is define the general data for the profile you wish to bend. To do so, you must press the icon that appears in the horizontal menu at the bottom of the manual mode screen.

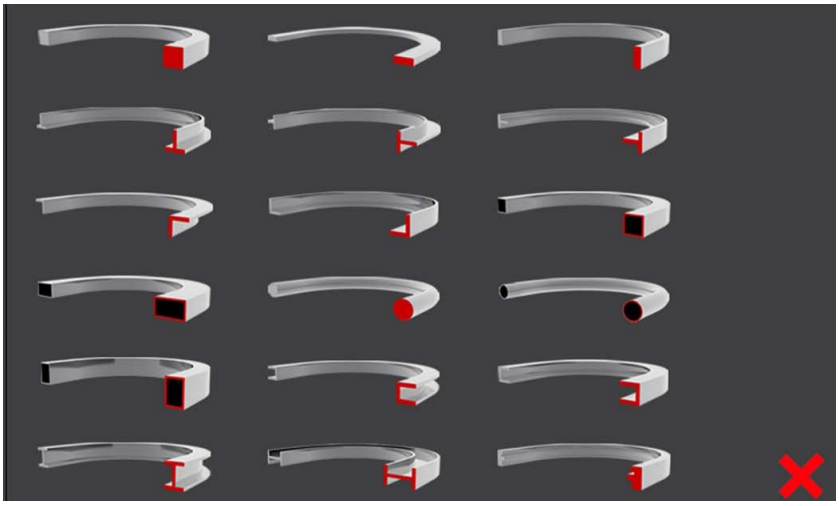


When doing so, a pop-up window appears showing the different profiles with which the machine can work.

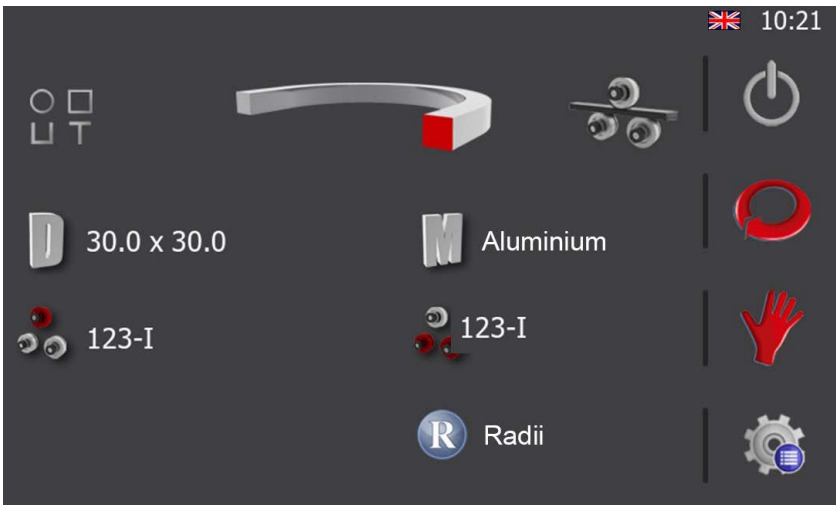
If you want to close it, just press the icon that appears in the lower right corner of it, and the application will return to the manual screen.



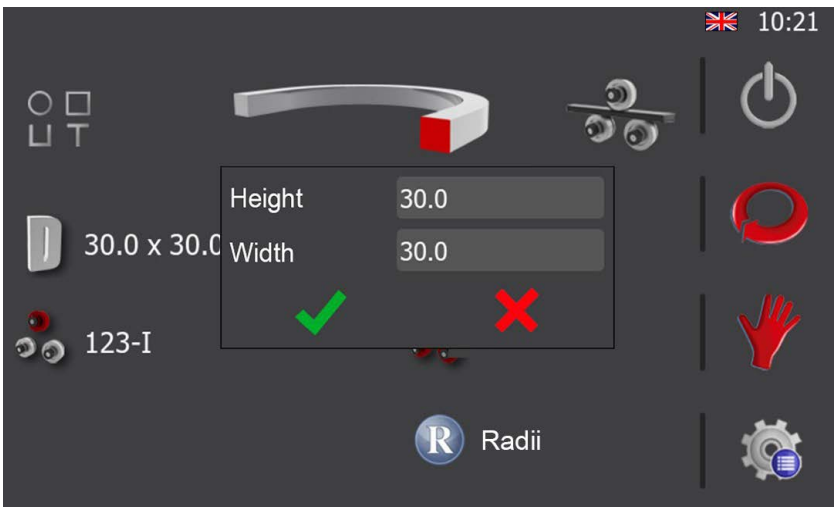

If you now press the lower horizontal menu icon again, the profile selection window appears again.



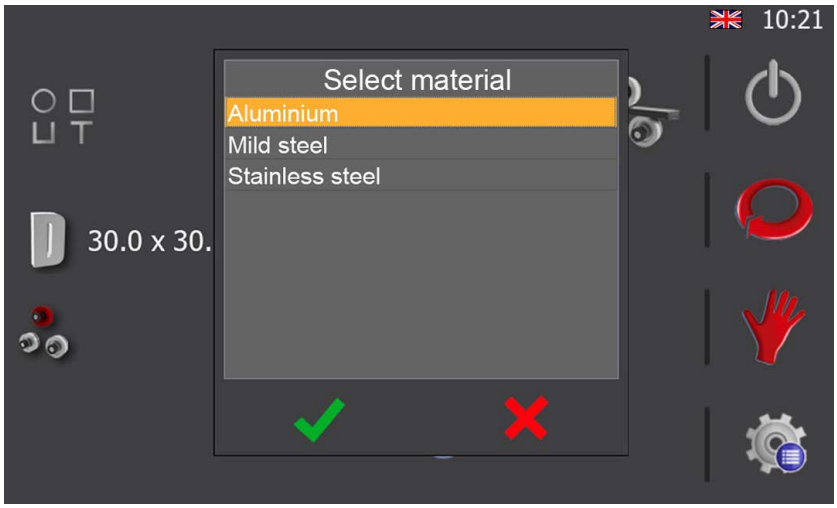
Now choose the profile you want to work with. To do so, you just have to click on the image of it and the graphical interface will change, showing this other screen.




In the example, we have chosen a solid square profile. It appears at the top of the screen. Plus, we have assigned the dimensions 30.0 x 30.0. To do so, just press the icon and fill in the corresponding fields as shown below.

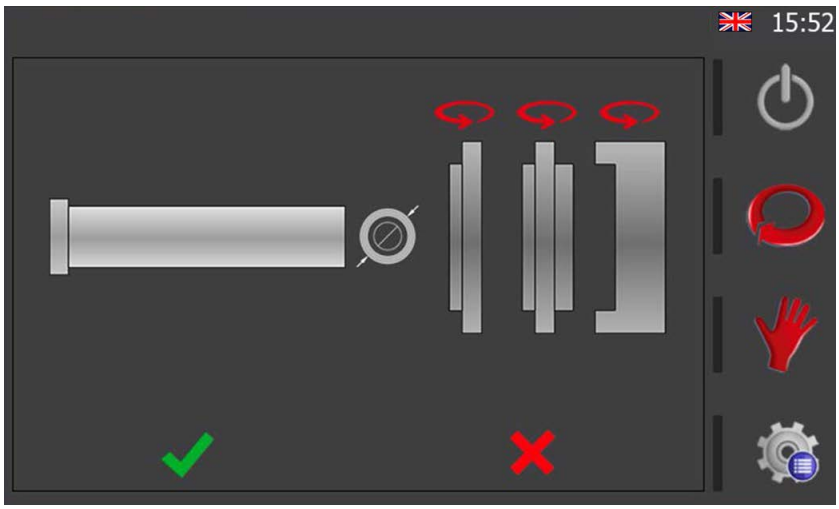


Once the dimensions of the profile to be worked on have been defined, select the material. To do so, press the  . icon. If this is done, a pop-up window will open with a list of materials available so you can select the one you need.




As soon as it has been chosen, accept to close the window.

Choosing the rollers is just as intuitive. The following graphic will appear upon selecting the top or bottom axis.




Using this interface, you can flip each one of the rollers (by pressing the arrow above them) and place them on the axis (by pressing the desired roller). Keep in mind that the order in which you press each one of the rollers will be the order in which they will be inserted on the axis.

Also, for flat profiles, you can select whether you want to work with the inside or outside diameter of the roll. That is, if to bend the corresponding profile it is going to support it on the innermost part of the roller (internal diameter), or on the outermost part of the roller (external diameter).

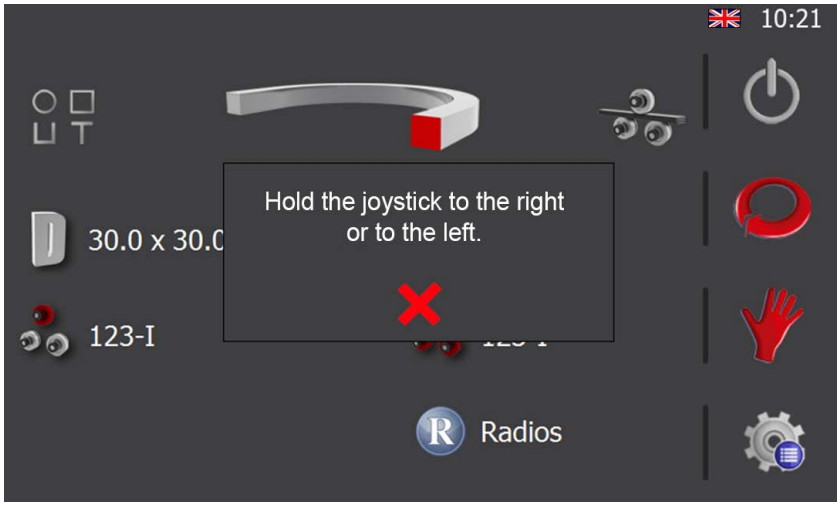
To do so, simply press the icon  (outer diemeter), and you'll see how it changes into this other one  (inner diameter). If you press again, the icons changes again.

This is a dynamic information menu. In other words, you'll see a different picture of the rollers if you selected a round profile or a custom profile in a prior step.

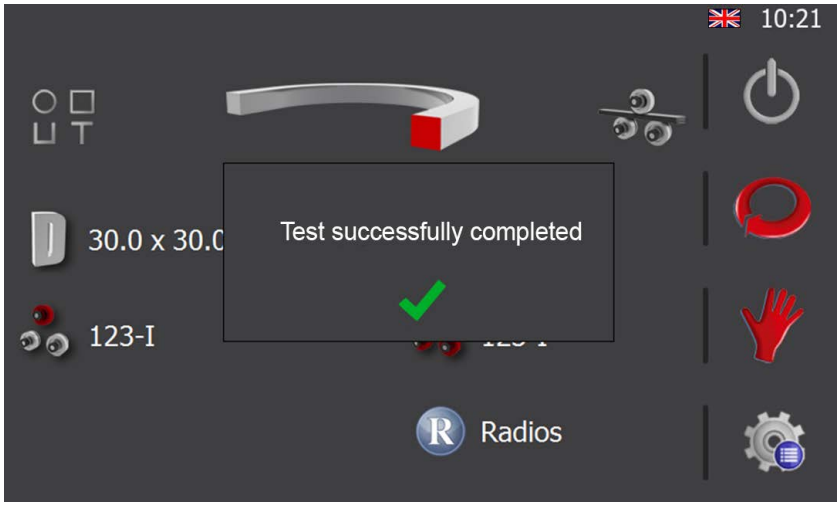
Press the OK button when the configuration is correct and you will have completed one axis. By repeating these steps, you may define the roller configuration for the remaining axis.

Having reached this point, the general data is available for the speed test, which is done by pressing the  icon at the top right of the screen. Nonetheless, make sure the material has been secured and the encoder is in the read position before starting the test.

After pressing this icon, you'll see this screen:




The procedure to be followed is extremely simple. As indicated on the screen, you must only keep the joystick pressed to the right or left. After a moment, the movement will stop and the following message will appear on screen:




When you press the accept button you will see the icon in the upper right corner of the screen change to , which shows that this type of profile, with its dimensions, material and roller configuration, already has a correct speed test. This means that, from this moment on, whenever we use the same data again, it is no longer necessary to perform the speed test since the bending machine already knows the maximum speed at which it can work.

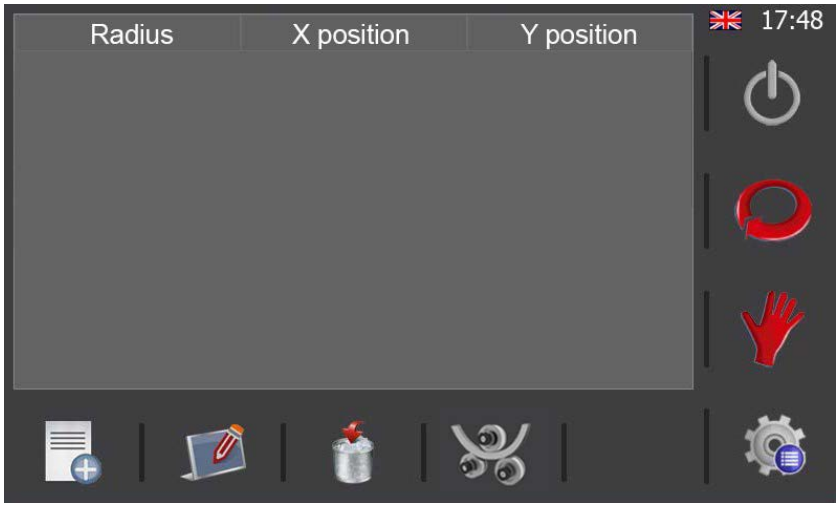
### 5.3.2.2. Creating a sample bar

Now that you know how to do a speed test for the type of material to be worked with, it is of vital importance to learn how to create a sample bar.

By definition and as the name indicates, a sample bar is simply a part with different radiuses that you can create based on a specific profile of a certain material. The purpose is to define how the material behaves; in other words, determine the position of the rollers to create any desired radius based on a few known radiuses (physically measured).

This brief explanation doesn't really do justice to the power of this novel function which allows you to create any radius without having to go through the typical trial and error process. You tell the bending machine which radius you want to make and it calculates the position of the rollers to do it.

As already explained in the previous section, the material must be secured in order to do the speed test. In any case, the first step in defining the sample bar is entering the position of the clamp in the radius table or the position of the X and Y axes in order to secure the material without bending it. To do so, press this button on the general data screen (insert the "RadiiInfo.png" icon here). This action gives you access to the following screen:




As can be observed, this window has a horizontal menu at the bottom. The function of each button is as follows:



New radius



Edit radius

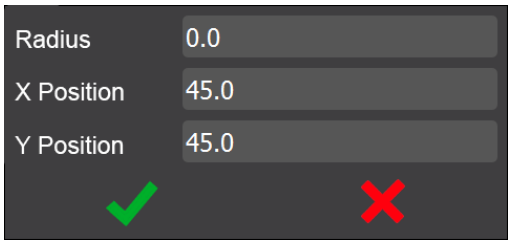


Delete radius



Estimate the position of the rollers for a specific radius

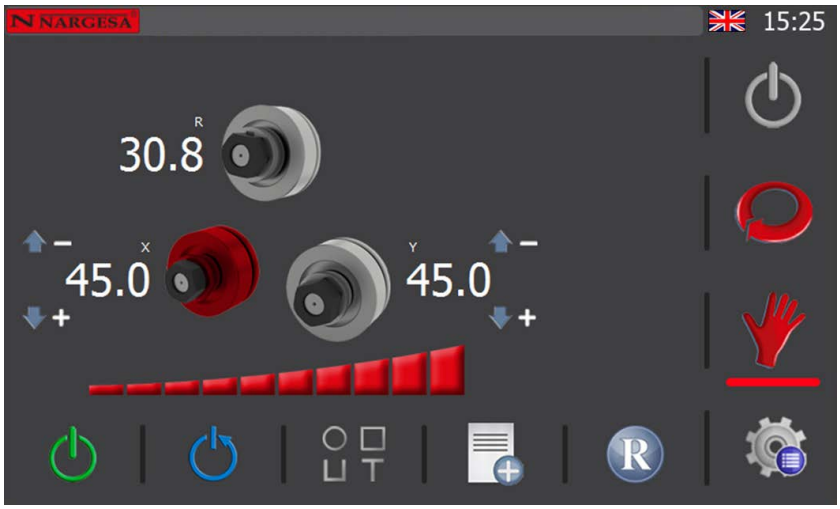
To enter the clamp position, you must press the button to create a new radius




You'll see how the position of the X and Y axes in the new window that opens up shows a value, which is simply the current position of the axes mentioned. So, since you have the material in the clamp position at this point (a requirement for the speed test), the values of the X and Y positions are now correct. You must indicate that it's the clamp position by entering a radius value equal to 0 and pressing the OK button.




Return to manual mode by pressing the icon (insert the "Manual.png" icon here) on the vertical menu to the right of the screen.

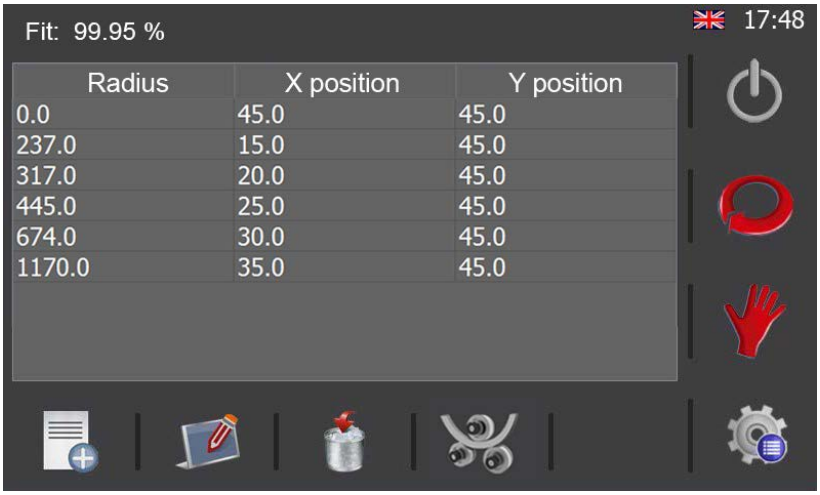



The idea now is to do a few radiuses, measure them physically and enter the values in the radius table already mentioned. To do so, you can use a 3-meter bar on which you're going to make 5 curves, each separated by a straight section. For clarification purposes, it's worth mentioning at this point that three radiuses is sufficient. However, the greater the number of radiuses, the greater the precision.

The idea is to obtain the complete range of radiuses to be worked with on the sample bar you're going to create; in other words, from relatively small radiuses to relatively large radiuses.
One example of the process is as follows. You do not necessarily have to use these values as they depend on the material to be worked with. Plus, making a mark on the bar of material under the middle roller right before moving the R axis forward is of vital importance to facilitating the work to be done later.

1. Use the joystick to place the beginning of the bar of material almost right below the middle roller.
2. Make a 200 mm straight section by pressing on the height of the R axis and entering this value.
3. Place the X axis at 35 by pressing on the height of this axis and entering this value.
4. Make a 350 mm long curve by pressing on the height of the R axis and entering this value.
5. Position the X axis at 45 (clamp position) by following the same process as mentioned before.
6. Make a 200 mm straight section by pressing on the height of the R axis and entering this value.
7. Position the X axis at 30.
8. Move the R axis a distance of 350 mm to make a curve.
9. Position the X axis at 45 (clamp position).
10. Make a 200 mm straight section.
11. Position the X axis at 25.
12. Move the R axis a distance of 350 mm to make a curve.
13. Position the X axis at 45 (clamp position).
14. Make a 200 mm straight section.
15. Position the X axis at 20.
16. Move the R axis a distance of 350 mm to make a curve.
17. Position the X axis at 45 (clamp position).
18. Make a 200 mm straight section.
19. Position the X axis at 15.
20. Move the R axis a distance of 350 mm to make a curve.

Once this process is finished, remove the sample bar from the bending machine using the joystick and then mark each curved section with the position of the X axis used to make it (35, 30, 25, 20 and 15 in the example). Now it's time to measure each curved section using a radius gauge and enter each of the values obtained in the radius table.



What follows is an explanation of the tightening percentage that appears at the top of the screen. Without getting into explanations that are too technically complex, it could be summarized as a value that indicates that the measurements taken are correct or, in other words, that the curve that defines how the bending machine works with a certain material matches the data entered in the percentage shown. The higher the percentage, the better the radius-position curve fit. In other words, the greater the tightening percentage, the better the results with the bend radius prediction.

Having reached this point, the process of creating a sample bar is finished. And this entire procedure makes it possible to now estimate the position of the X and Y axis rollers to achieve any bend radius.

For example, assume that you want to bend a bar of the same material used for the sample bar yet with a radius not done up until now. To do so, you can use the button (insert the "PositionsEstimation.png" icon) in the horizontal menu at the bottom of the screen.




As can be observed, the position of the rollers on each axis will be automatically estimated if you enter any value in the bend radius textbox (380 mm in this case). As you may have already realized, this feature makes the Nargesa bending machine incredibly powerful.

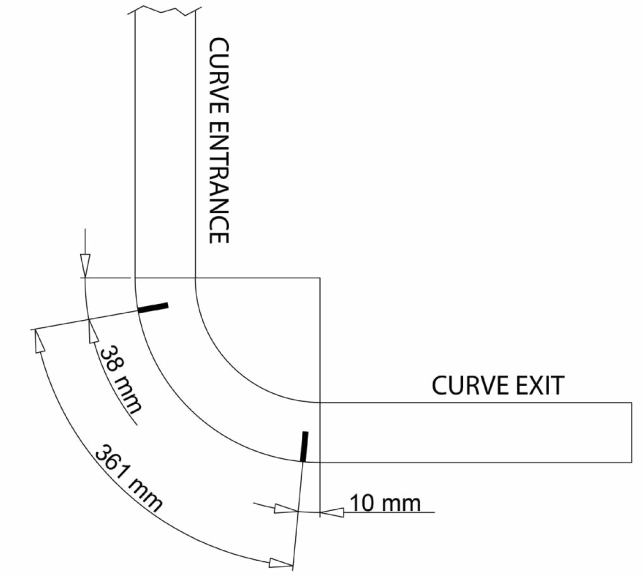
One important thing to highlight at this point is that the radius estimate button mentioned can be used to bend manually if you wish as you'll also see how to define radiuses in a much more intuitive way during the numerical program creation process.

Now you have the knowledge necessary to make the sample bar and enter these values in the bending machine. Nonetheless, you can use the sample bar created to extract certain information which will be highly useful when creating programs to create parts with specific dimensions.

This information is as follows, and represents how the material is deformed during bending:

1.- When changing from straight to curved, how much of the straight distance is lost and how much is gained in the bend.
2.- When changing from curved to straight, how much of the straight distance is lost and how much is gained in the bend.
3.- How much the material is stretched during a bend.

These data related to the example being explained are represented in the following figure which shows the information in a much clearer way. It's important to also mention that it's easier to do these measurements with a smaller bend radius. This is because the deformation effects to be measured are magnified with relatively small bend radiuses.



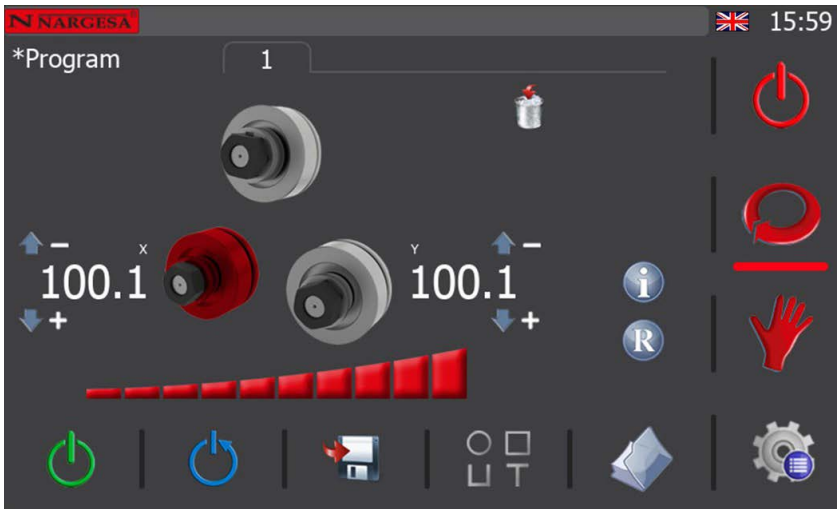

As can be observed, the information extracted is as follows:

1.- When changing from straight to curved, 38 mm of the straight section is lost yet gained in the bend.
2.- When changing from curved to straight, 10 mm of the straight section is lost yet gained in the bend.
3.- A 350 mm curve was done and the actual measurement is 361 mm. Therefore, there are 11 mm of deformation in the material for every 350 mm the R axis is moved forward.

With all of this data, you're now ready to create parts with specific dimensions. In other words, you should increase the length entered in the program with respect to the dimension you want to physically achieve if you want to make straight sections as some millimeters are lost in the straight section at the bend input and output. Thus, you should reduce the length entered in the program with respect to the dimension you want to physically achieve if you want to make curved sections as some millimeters are gained in the bend due to deformation.

Having explained the process for making a sample bar, there is one thing that must be kept in mind. It is by no means possible to guarantee you will obtain the same radiuses as the first with the sample bar values from one batch to another of a certain profile, even when it is from the same manufacturer or, worse yet, when from different manufacturers. This can only be guaranteed for profiles of the same hardness and composition from the same batch and the same manufacturer. Therefore, it is best to check the result after conforming the first part before doing any mass production.

### 5.3.3. Automatic Operating Mode




To access the automatic bender operating mode, just press the icon on the vertical menu at the right of the screen.

A new program is created when you do this if you are not already working with a program. To begin, you must define the profile to be worked just like when you access the manual operating mode general data. Once the profile is chosen, you can complete the general data such as the dimensions and material or leave that information for later and begin creating a program by pressing the icon on the vertical right menu again.

As can be seen in the image above, the information on the screen has slightly changed with respect to manual mode yet the graphic interface continues to be clear and intuitive.

Automatic operating mode allows you to create and save bending programs for mass production with the possibility of multiple radiuses on each piece. This operating mode is an evolution over the manual operating mode and, as seen below, it is also simple and powerful.

As can be seen at the bottom of the graphic interface, the active mode menu has changed. Now, in addition to the hydraulic pump control and system reset icons, there is an icon to save steps, one for general data and another for program management.



Save steps



General data

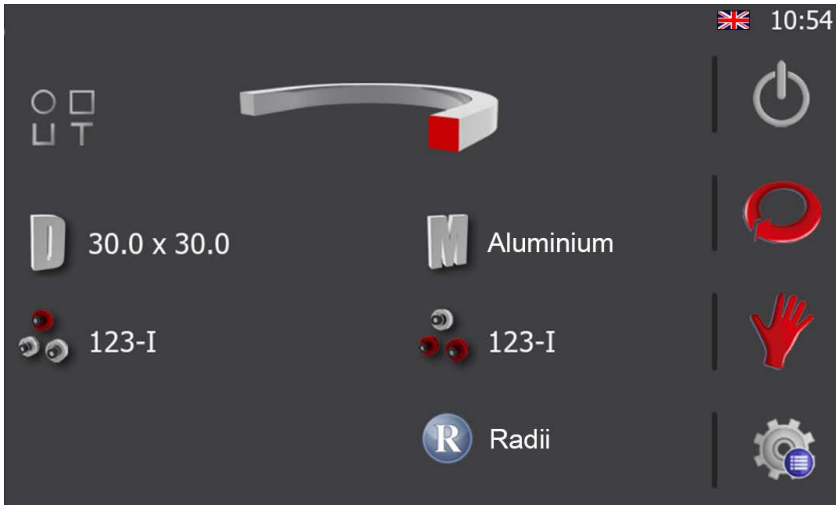


Program management

### 5.3.3.1. General Data

When bending a certain piece using a program, you need to know the type of profile used, the dimensions it had, the material, the position and rotation of each of the rollers used on the different axes in order to replicate the piece later.

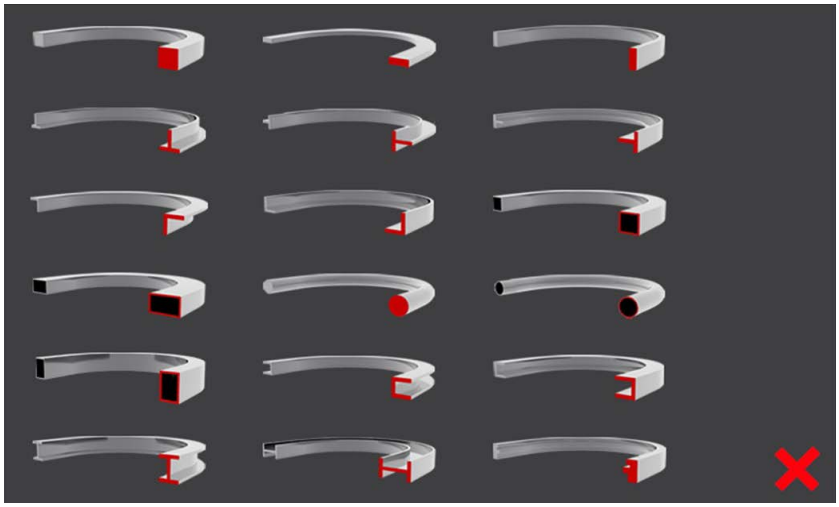
This information can be added for each one of the programs used. To do so, press the button on the horizontal menu on the automatic operation screen.




Now, you just need to complete the information by pressing on each of the items that appear on the screen. They are:

1.- The type of profile (top).
2.- Dimensions and material (middle).
3.- Rollers used and their position on each axis (bottom).
4.- Custom roller (data only visible for custom profiles).

By pressing on the profile image, or by pressing the icon shown to its left, a miniature view of the different options available shows up on the screen. To select the desired profile, just click on the corresponding image or cancel the selection by clicking on the icon .



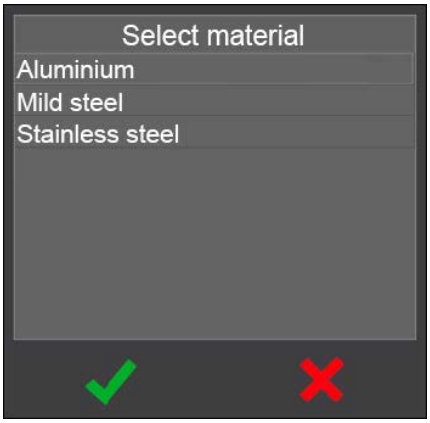
Remember the following data may vary based on the type of profile chosen. In other words, to define the dimensions when selecting a solid square profile, you must enter height and width. To define the dimensions when selecting a hollow square profile, however, you must enter height, width and thickness. Like-wise, you must enter the diameter if you choose round profiles.

As can be observed, it is a dynamic information menu which adapts in real time to the choices you make.

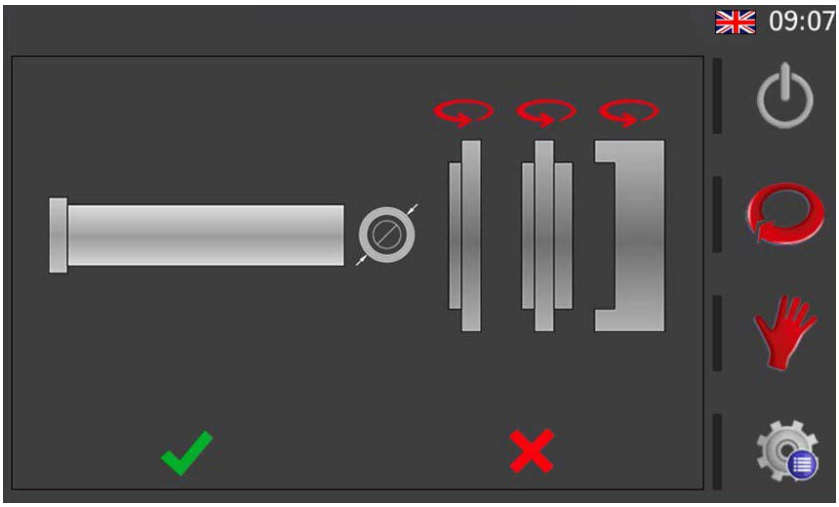
A screen like the one below will appear when you press the dimensions icon. To complete the data, you only need to press on each one of the textboxes and use the virtual keyboard that appears to enter the correct values.




Upon pressing the material icon, you'll see a list from which you can choose the material.




Choosing the rollers is just as intuitive. The following graphic will appear upon selecting the top or bottom axis.



Using this interface, you can flip each one of the rollers (by pressing the arrow above them) and place them on the axis (by pressing the desired roller). Keep in mind that the order in which you press each one of the rollers will be the order in which they will be inserted on the axis.

Plus, you can choose if you wish to work with the inside or outside diameter of the roller for flat profiles. In other words, when bending the corresponding profile, whether it will be supported on the innermost side of the roller (inside diameter) or the outermost side of the roller (outside diameter).

To do so, just press the icon (outside diameter) and you'll see how it switches to this other (inside diameter). If you press it again, the icon changes again.

As already mentioned, you'll see a different picture of the rollers if you selected a round profile or a custom profile in a prior step since it is a dynamic information menu.

Press the OK button when the configuration is correct and you will have completed one axis. By repeating these steps, you may define the roller configuration for the remaining axis.

Besides information referring to the profile itself, the dimensions and the material as well as the configuration of the rollers in each one of the axes, this radius information icon appears on this general data screen.

The purpose is to provide access to the radius management screen shown below.




Here, based on the four icons that appear in the horizontal menu below, new radiuses can be added to the database, the existing radiuses may be edited and they may even be deleted if necessary. Estimates can also be made of the position of the rollers to get the requested bend radius.



New radius



Edit radius



Delete radius



Estimate the position of the rollers for a specific radius

Likewise, if you have already created a list of radiuses based on a sample sweep for a certain profile with specific dimensions and specific material, the corresponding ones will appear on this screen. Thus, you can also consult the radiuses that exist in the application database here.

After completing all the information necessary and checking whether the radius information is accurate, you can return to the manual mode or automatic mode operating screen by pressing on the corresponding icons in the vertical menu.

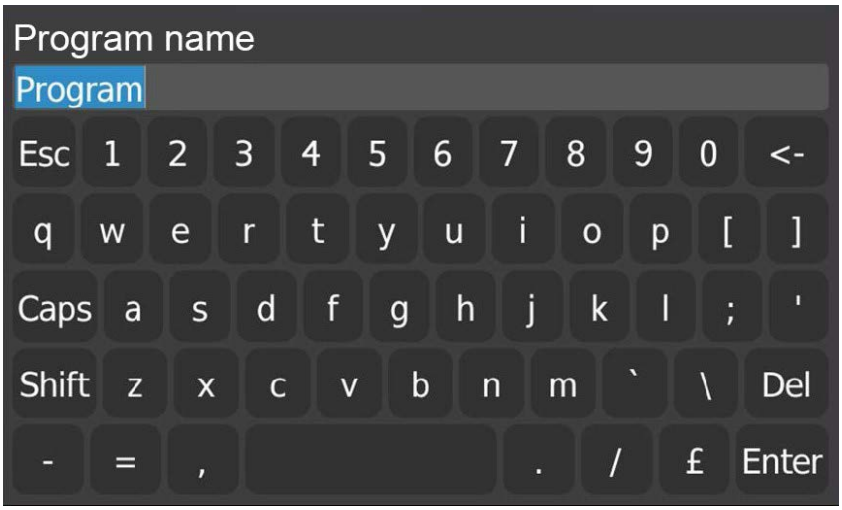

Manual mode
Automatic mode

### 5.3.4. Program Management

Since many jobs currently need to be done with the same machine, the profile bender allows you to save and load all the programs used with it. Thus, repeating pieces made previously is as easy as loading the corresponding program and switching to production mode.

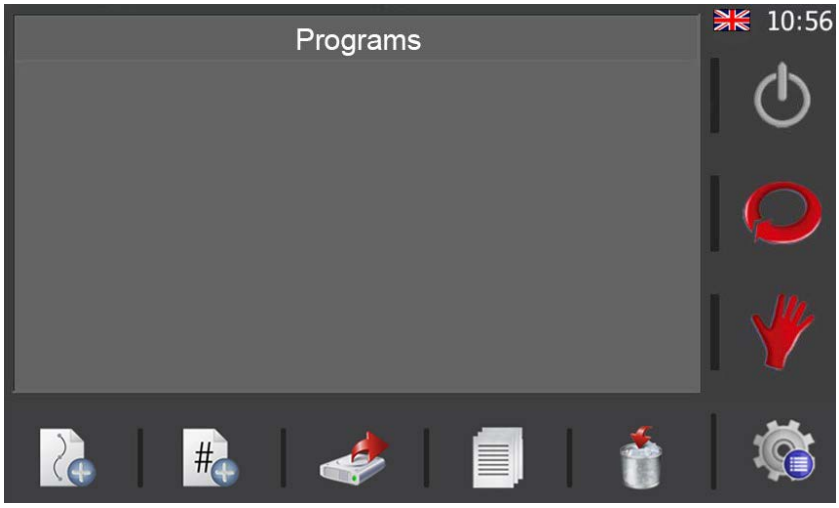
The name of the program being used will appear at the top left of the screen (in automatic mode) and sometimes the "*" indicator will be displayed at the beginning. This indicator warns the operator that data has been modified yet not saved to the hard drive. In other words, you can load a program and modify it to make an isolated piece yet not save it. Or you can save it if you want to keep the change. It's your decision.

To save the program, you must press on the name of the program (text at the top left) and a virtual keyboard will appear to enter a name if it hadn't ever been saved. If, on the contrary, you had already chosen a name previously, it will be saved on the hard drive and the "*" indicator will disappear upon pressing the name.



You can save your program with these basic steps but you'll need to create a new program at some point or load a previously created program. This function can be found by pressing the icon in the horizontal menu (only step-by-step programs) giving you access to the program management screen.

You may also access the program management screen by pressing on the menu icon (at the bottom right of the screen) and then selecting the icon




By using the horizontal menu here, you can do the following:

Create a new program step-by-step

Create a new numerical program

Load an existing program

Save a program as

Delete a program

### 5.3.5. Creating a New Program step-by-step

All of the programs created are made up of steps. A program can have as many steps as are necessary to generate the geometric shape required based on the piece curving.




The first step in a program is known as the "unloading step". As the name indicates, this is when the position of the rollers allows you to remove the piece created without it colliding with the rollers. Therefore, to create it, you just have to position the rollers on the X and Y axes at a height that will then make it possible to remove the finished piece once it is created.

You learned to move the X and Y axis rollers in manual operating mode using the directional joystick as well as direct positioning. Here, you can use any of these methods to correctly position the rollers. Thus, once you are satisfied, just press the  icon on the horizontal menu to save the current step. Accept the confirmation message and continue.



The second step in a program is known as the "loading step". This is when the position of the bender rollers allows you to insert the material to be worked using the machine.

To create it, just place the X and Y rollers in a position that allows the profile or pipe to be bent to enter the machine without colliding with the upper roller. You learned how to move both rollers in the section on the manual operating mode. You follow the same procedure here.

So, once both rollers (X and Y) are positioned in the "loading" position, this step can be saved by pressing the icon on the horizontal menu. Accept the confirmation message and continue.




Upon doing so, the application creates a third step for the program. This step is known as the "clamping step", which is when the material loaded in the machine and ready for processing is firmly secured between the upper roller and the two bottom rollers.

As a result, rollers X and Y must be moved to define a good clamping step so the profile or pipe to be worked is secured with the three rollers without deforming it.

Once that has been done, save the current step as you learned how to do for the previous step. Accept the confirmation message and continue.



Having reached this point, you must begin referencing the R axis before starting to bend the material. To do so, just press the ✔ icon.

You must be aware that any program created with our MC550 bending machine absolutely requires these four steps before bending can begin. The reason is to provide you, as the user, with a comfortable and safe operating mode all while guaranteeing the result obtained for all pieces of the same type of profile or pipe will be excellent for exceptional repeatability throughout the entire series.



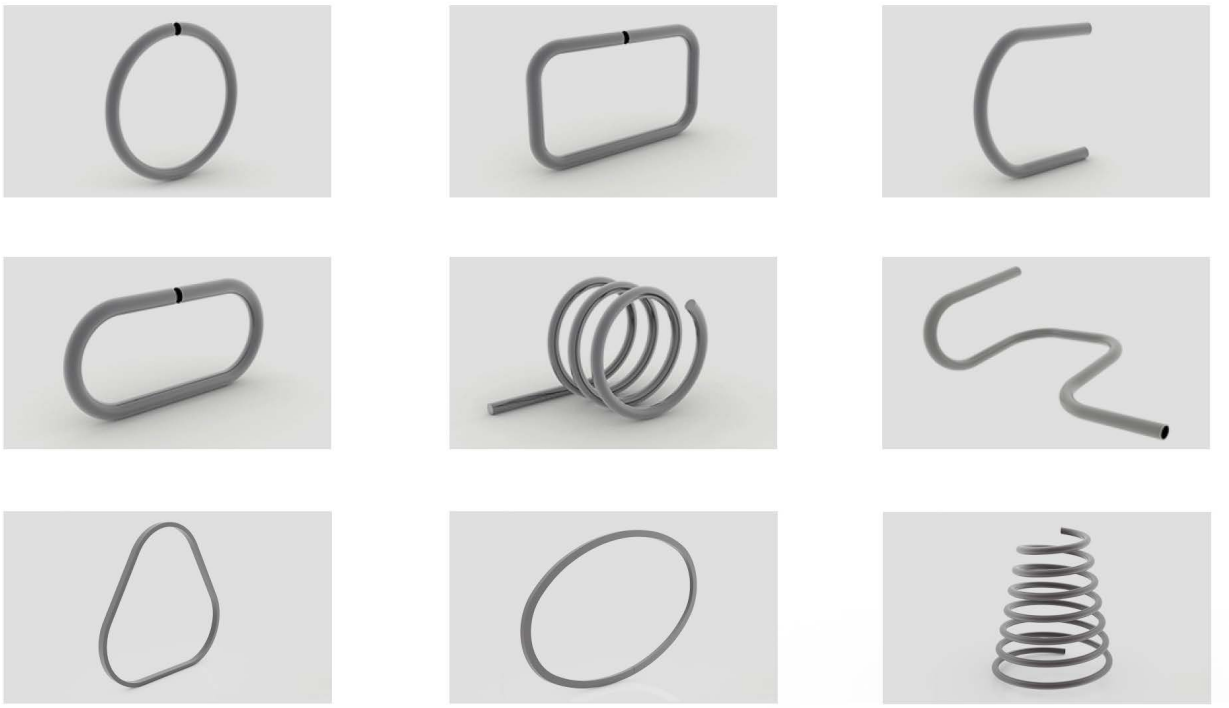

Now, with the material secured in the machine, choose the R axis and it can be placed in position to begin bending by using the joystick to make the rollers rotate towards the left or right as learned in the section on the manual operating mode, or by direct positioning.

Once the profile or pipe to be processed is in the required position, save the step by pressing the icon. After that, choose which of the two rollers (X or Y) you want to move to begin making the desired curve. Then, activate the directional joystick upwards or downwards or directly position the selected roller to place it in the position to create the bend radius entry. As soon as you are satisfied with the position reached (remember the current height is shown on screen at all times), you can save the step as you did before. Accept the confirmation message and it will be ready to create your first bend radius.

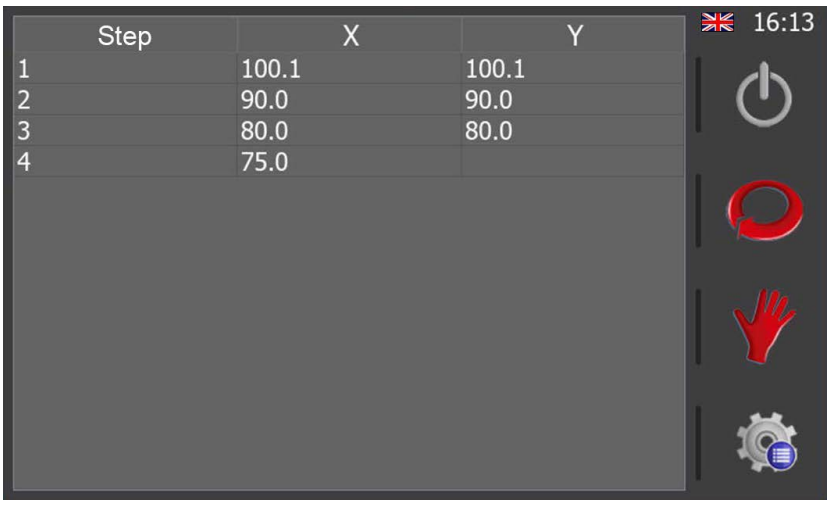
Having reached this point, choose the R axis again and turn the rollers to the right or left as desired to create the bend in one direction or another. Firmly secured in the machine and with the beginning of the bend radius already created, the profile or pipe to be processed will begin to be bent following the radius generated based on the geometry defined by the three pull rollers.

If you are satisfied with the resulting piece, you can move on to production. If you are not, adjust the X and Y rollers again to get a larger or smaller bend radius as required.

When the curve is finished, save the current step as done before and continue, if necessary, creating new steps to complete the desired geometry. And this gives rise to end pieces of varying geometric complexity. Obviously the more complex the result must be, the more steps you must create with the program to achieve it. You just have to learn how to operate this tool, which is as useful as it is powerful, to create pieces as surprising as these.



Plus, remember that you can check the steps already saved in the program being created at any time. To do so, just press the icon in the middle of the automatic operating mode screen.

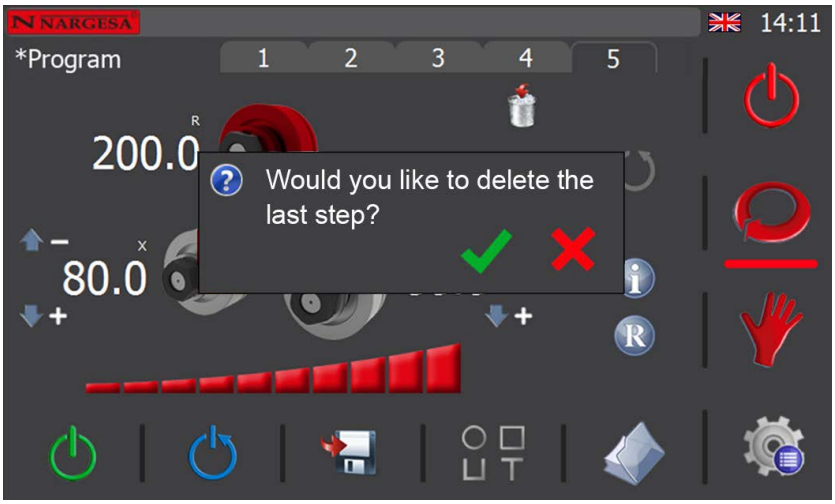



This information can be quite useful when creating a program so you can reposition the rollers in a certain way; if you want the piece to have a straight section after a bend, for example.

In any case, it's best to experiment and do some trial and error to get the most out of this useful function offered by our bending machine software.

Finally, just press the icon on the vertical menu at the right of the application when you wish to return to the automatic mode screen.

In addition to everything mentioned so far regarding program management, you should know that you also have the possibility of deleting the last saved step. To do so, just press the icon .




As you can see, a confirmation message for the deletion of the last saved step appears on the screen.

If you cancel by pressing the , button, the last saved step of the program will not be deleted. On the contrary, if you accept, by pressing the button, the last saved step of the program will be deleted.

In this way, step by step, you can eliminate all the steps of the created program until there are none left.

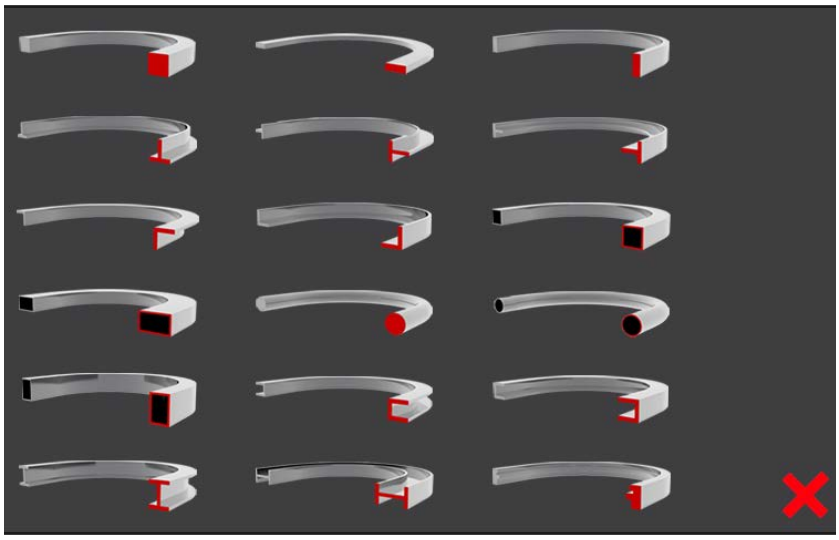
Obviously, the purpose of the delete last saved step option of a program is to allow you to correct specific errors that you have made during the creation of a program. Therefore, as soon as you realize that you have made a mistake, correct it in this way, so that you do not have to eliminate more steps than are merely necessary.

At this point, the only thing left to say is that, if at any time you wish to access the radio information for the selected profile and material, all you have to do is press the icon that appears on the screen. These can be useful while creating the steps for a program to get a certain radius (that exists in the database or with an estimate), thus making the bending process more flexible based on the requirements.

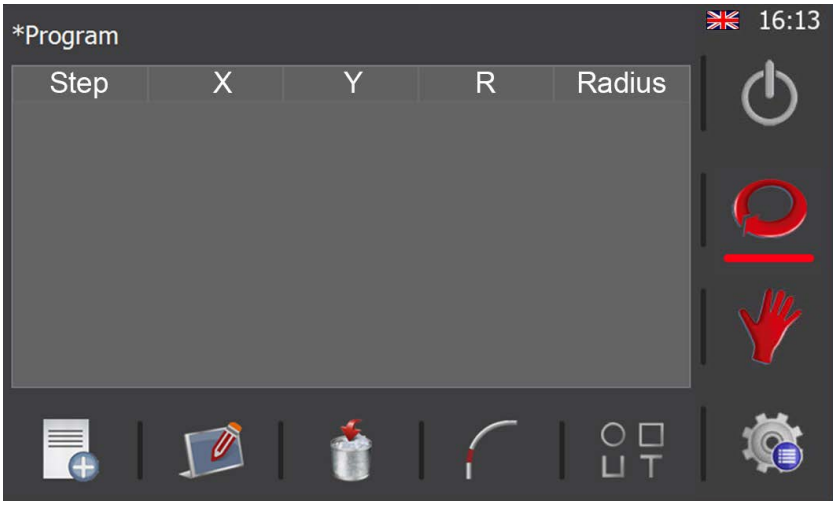
### 5.3.6. Creating a new numerical program

With the option of creating a new numerical program, you can edit the steps in the program directly without needing to move the axes while creating a first part. As is logical, this operating mode is only recommended for advanced users with good knowledge of the bending machine and the process of creating parts.

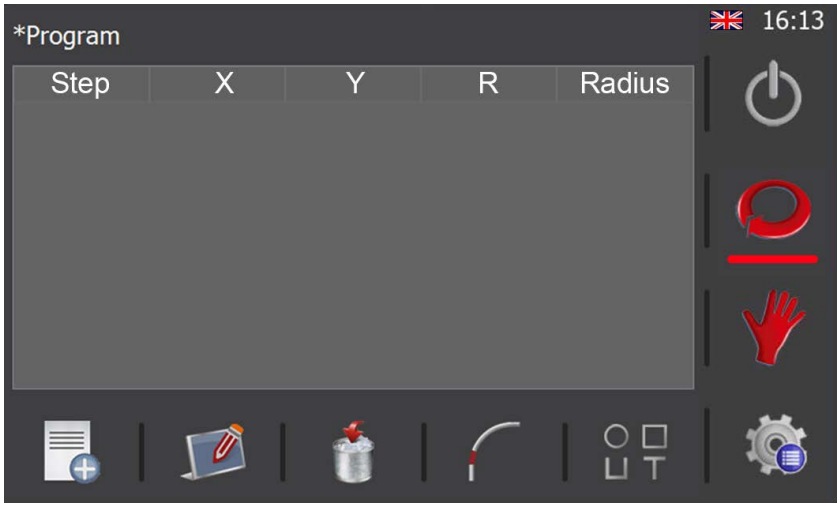
To begin, the first thing you must do is choose the type of profile you're going to work with.



Having made this choice, you must specify all the parameters for the chosen profile, as well as the arrangement of the adequate rollers in each of the axes to create the desired part.



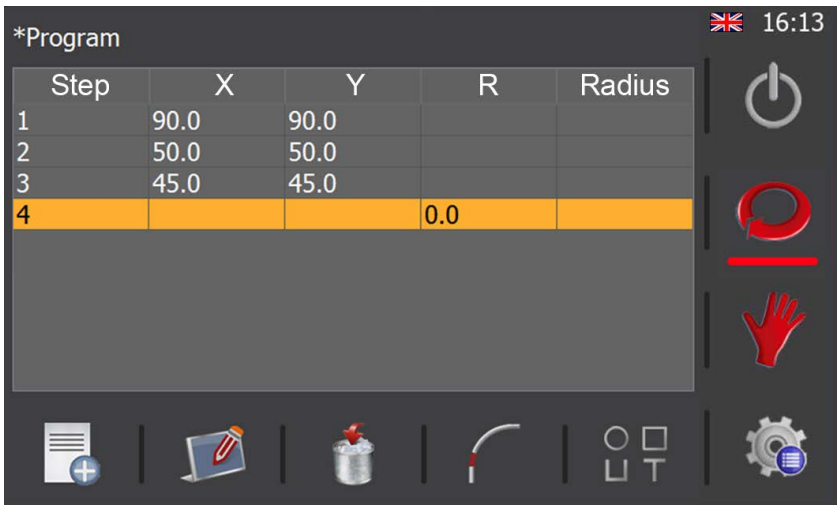

Now press the  icon on the vertical menu to start creating the actual numerical program.




By using the horizontal menu here, you can do the following:

- Create a new step
- Edit an existing step
- Delete an existing step
- Create a pressed interpolation between two steps in the program
- Access general program data

The structure of the different steps comprising the numerical program is the same as for a step-by-step program. For this reason, the first thing you must do is create an unloading step, followed by a loading one and then another clamping one. To do so, just define the position of the X and Y axes in each of them (the position of the R axis cannot be defined yet as it is not referenced).



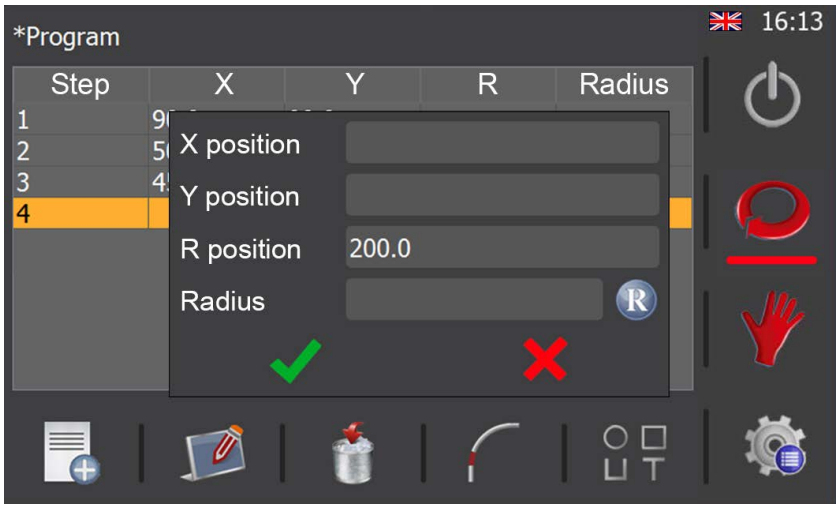
Having reached this point, as can be observed, a fourth automatic step has also been created. It's the R axis referencing step which is always essential to being able to begin bending the chosen profile to create the desired part.

From here, you can go about creating the different steps that will create the geometry you want. However, we recommend following this example first to understand the appropriate process.

### 5.3.6.1 First section

It's common to have a straight section before the first curve on a profile. This varies depending on the part to be created given that, if you wish to shape a complete circle, the first section will only establish a useful support point for the creation of the part. On the contrary, if you wish to create a more complex geometry such as a triangular shape, this first section will be part of one of the sides.

So, to create this first section, what you must do is press the (insert "NewStep.png" icon) icon in the vertical menu and specify the length, as shown in this example, defining the new position for the R axis.



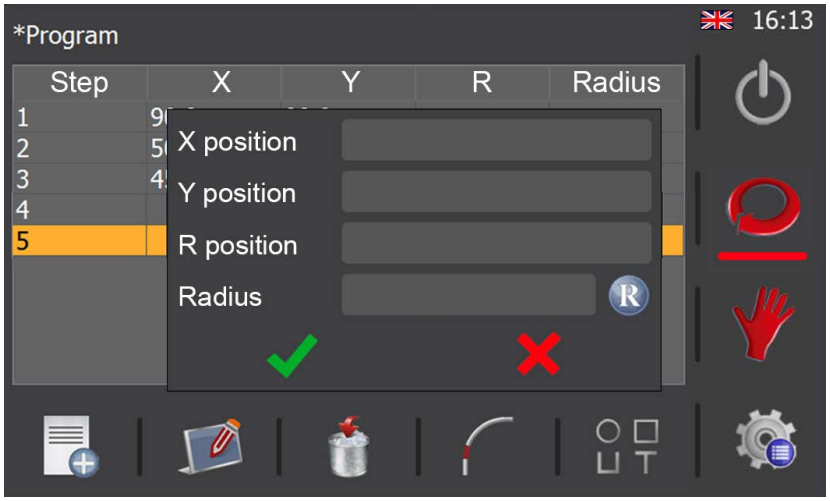

Obviously, you must remember if the first section is too short, it can prevent the part from being completed if there is no support point on the three bending machine rollers.

### 5.3.6.2. Creating a curve

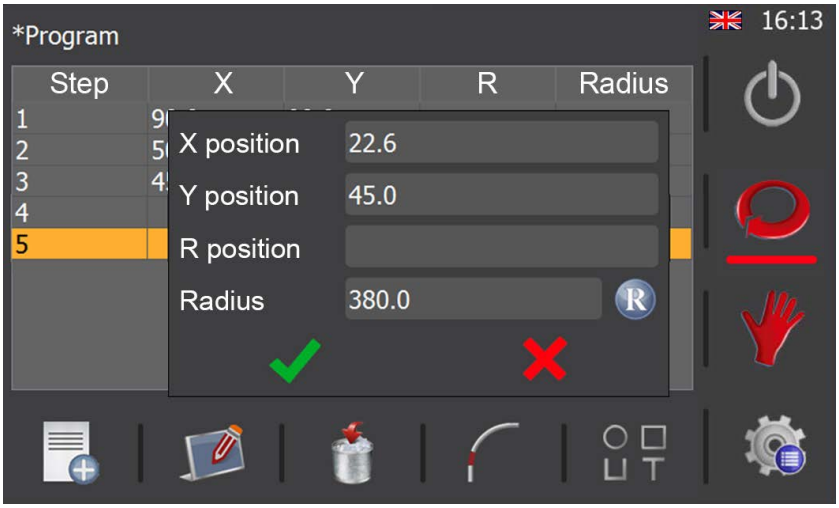
When creating a curve with a certain radius in a step-by-step program, you place the X or Y axis you're going to work with in position and then move the R axis forward to go about bending the profile. You must follow a similar procedure for a numerical program; however, there are three possible variations: creating a curve in two steps, creating a pressed curve in several steps or creating an interpolated curve.

#### 5.3.6.2.1. Creating a curve in two steps

To create a curve in two steps, the first thing you must do is position the axis you're going to work with (X or Y); in other words, position it based on the desired radius. To do so, press the ("NewStep.png") icon in the horizontal menu and you'll see this screen.

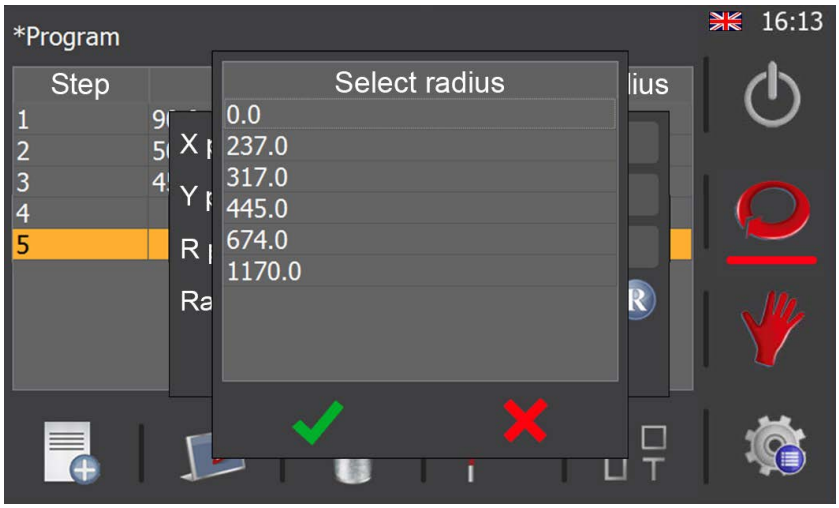



Now, if you press "Radius" in the textbox, you'll see how a numeric keypad appears in order to enter the value of the bend radius you wish to create. Enter the value you need and press the "SET" button. By doing so, the information on screen switches to this:



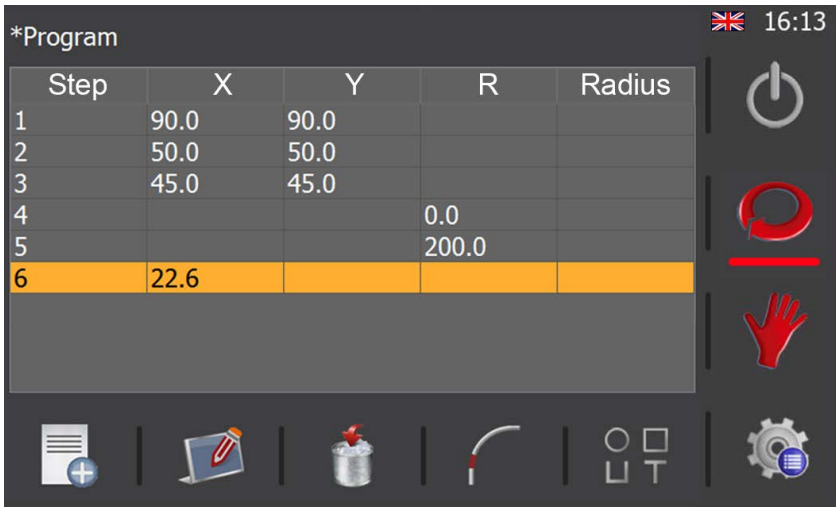

As can be seen in this example, we have entered a radius of 380.0 millimeters. After this value, the bending machine application estimates the position of both rollers to generate the requested bend radius. Therefore, keeping in mind that we work with an X axis, it's normal for this to be positioned at a lower value than the Y axis, which maintains the material clamp position.

You must remember that the position of the axes estimated by the bending machine application is a very powerful and useful tool yet basically reserved for when the bend radius requested is not available in the radius database. If the bend radius you want to create already exists, it's better to press the (R) icon to show the list of radiuses present in the database as shown below.

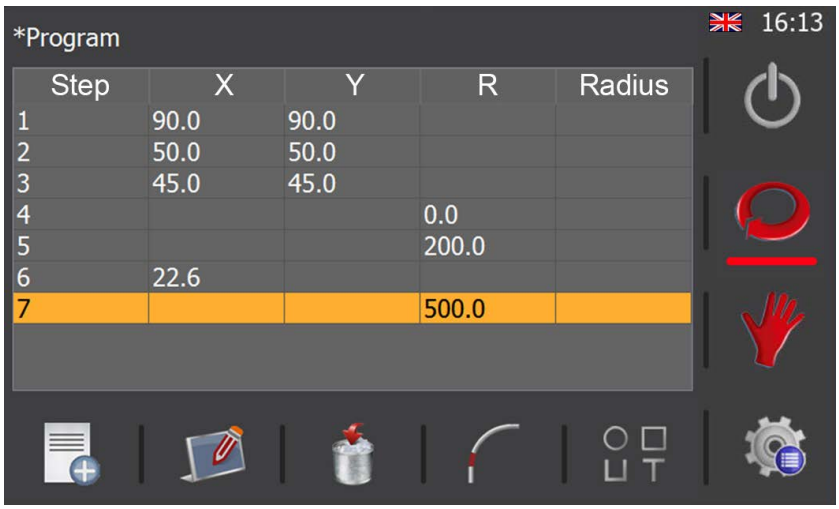



Just choose the one in the list you need to create the curve and press OK. In this case, you get the real position of the axes for the desired radius.

Having reached this point, as soon as you press the ✔ , icon, you'll see how a new step has been created where the working axis (X in our example) is already associated with the right position value to generate the bend requested.

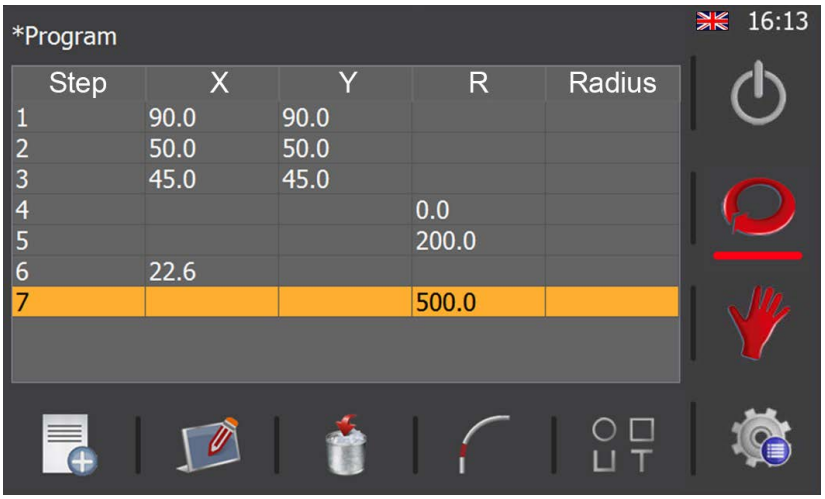



Now, the only thing left to make the desired curve is create a new step specifying the forward movement of the R axis that logically corresponds to the length of the circumference arch to be created.

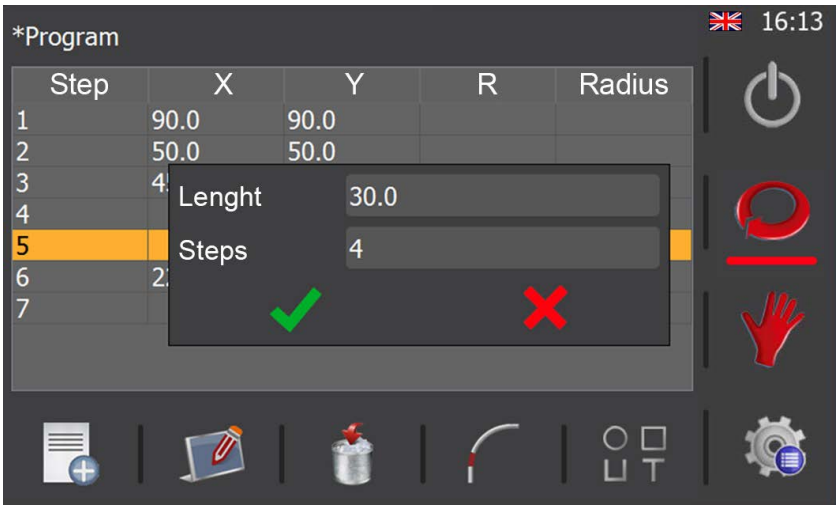


### 5.3.6.2.2. Creating a pressed curve in several steps

Creating a curve in two steps is the simplest method for creating a curve in a numerical program. Nonetheless, there's usually a bit of a deformation on the end part at the beginning of the curve. This often does not pose any problems at all, yet the transition between the preceding section and the beginning of the curve can be softened and, thus, minimize the deformation on the end part if a pressed curve is created in several steps.

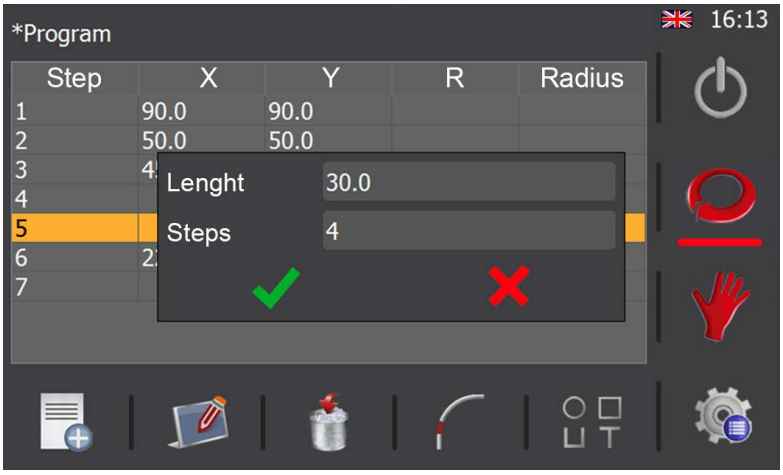



To do so, once a curve has been programmed in two steps, as defined in this example in steps 6 and 7, just choose the step prior to the beginning (step 5) and press the  icon on the horizontal menu. By doing so, the information on screen switches to this.




You must specify the length of the section of the part you wish to press in the length textbox. In general, as already mentioned, the most obvious deformation always appears at the beginning of curves, so we'll focus on this specific point in our example. In this case, a pressed length of 30.0 millimeters should be entered which is more than enough to soften the beginning of the curve.

Next, indicate the number of steps you wish to create to do the pressing. In general, the more steps you add to the pressing, the softer the transition will be between the curve and the preceding section. However, excessively increasing the number of pressing steps above those merely necessary will not make the end result much better. The only thing it will do is make the part creation process slower since there will be a higher number of steps which the application must process in order to bend the profile. In our case for the example proposed, four pressing steps are enough.

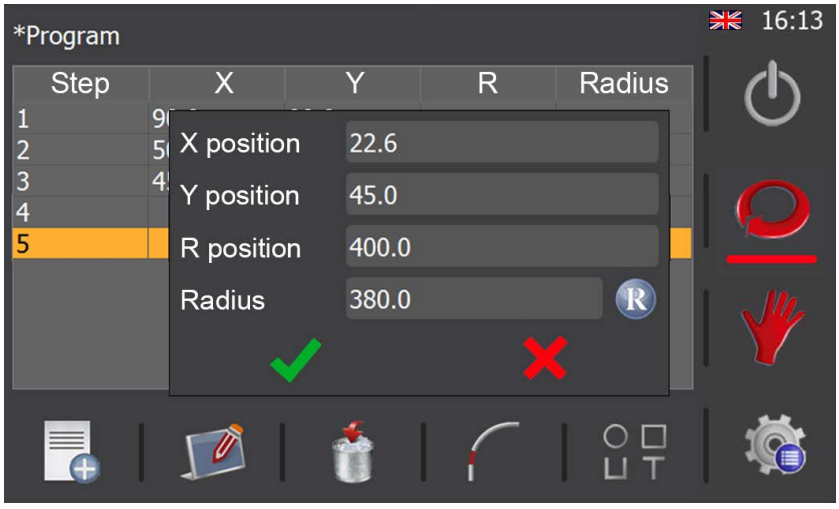



As can be seen, if you analyze the steps in the program created up until now, you'll realize that a succession of steps have been created between the positions of the X axis defining a straight section (X = 45.0, where the axis is found in step 5, because it does not move from step 3) and a bend radius of 380.0 millimeters (X= 22.6, where the axis is found in step 12), alternating the movements of the X and R axes to create a four-step press.

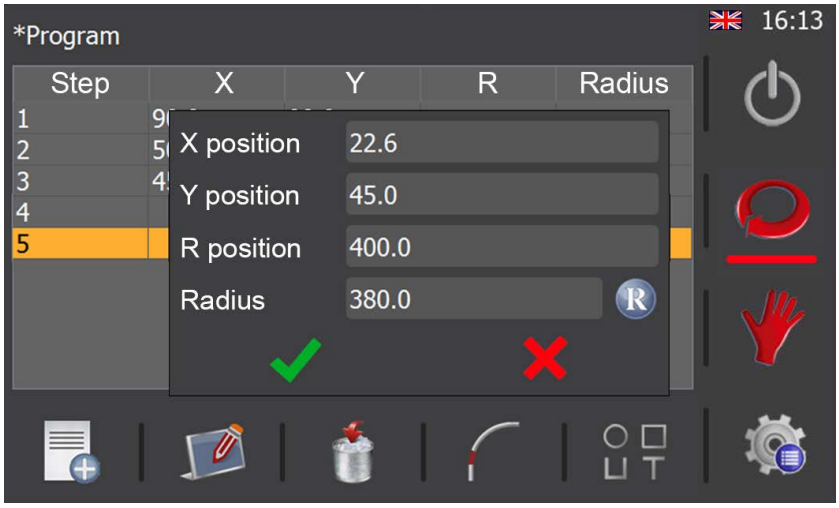
### 5.3.6.2.3. Creating an interpolated curve

As a third possible variation for bending material, you can create an interpolated curve. The unique thing about this way of creating a curve as opposed to the other two seen in the preceding sections is that the working axis here (X in our examples) as well as the forward axis (R) move simultaneously to create completely soft transitions between two consecutive sections of a geometric shape.

So, to create an interpolated curve, you just have to add a new step to the program at the point necessary by specifying the positions of the two axes used to create it (position of the X axis to define the bend radius, and the position of the R axis to define the length of the curve to be created). An example is shown below.



Obviously, you can determine the position of the axis defining the bend radius (X in our example) after choosing an existing radius from the database (accessing it by pressing the R icon or getting it from an estimate by the bending machine application with a curve adjustment.




Another thing that makes this curve creation method a highly versatile tool is the possibility of making an independent speed adjustment for the two axes involved with the material bending operation.

By default, the axes that define the bend radius and length of the curve when creating interpolated curves move at the highest possible speed. However, both speeds can be adjusted to get the ideal results on the end part. To do so, however, you need to finish the numerical program being created. So, the best thing is to first complete the geometry of the end part by creating the steps necessary and then finishing it.

To do so, just press the icon. If you do this, you'll see how that icon switches to this other one , and the numerical program finishes and is ready to enter production mode.

Having reached this point, you could begin producing parts. However, let's remember the objective is simply to modify the speed of the step in the program for creating an interpolated curve. Therefore, you need to press the icon in the vertical menu again (doing so again switches it to this other one ), in order to go back to editing mode.

Now, use the navigation arrows to reach the interpolated step (step 6 in our example) in the program you've been creating numerically.




As can be seen, if you choose the interpolated X axis, it will be highlighted in red along with the roller fastening nut. Now, if you vary the speed of the axis using the speed adjustment bar under the X and Y axis rollers, you'll simply change the speed of the chosen interpolated axis. In the example shown, the maximum speed was left for this axis at 100% (the default speed for an interpolated axis).




If you choose the interpolated R axis, you'll also see how it will be highlighted in red along with the roller fastening nut. In this case, unlike what was seen with the interpolated X axis, you've decided to modify the maximum speed for this axis to 60%.

### 5.3.6.3. Editing steps

You can edit any existing step in a numerical program except step 4, which always corresponds with the R axis referenced step.

To edit a step, you just have to choose the one you need to change by selecting it directly from the table of steps comprising the numerical program. Having done this, press the  icon from the horizontal menu and modify the values as necessary.

### 5.3.6.4. Deleting steps

All the steps in a numerical program can be deleted except the first five which include the unloading step, the loading step, the clamp step, the R axis referencing step and a fifth and final step which determines the start of operations leading to the creation of the desired geometric part.

Thus, to delete a step, just first choose the one you don't want in the numerical program by selecting it directly from the table of steps. Then, just press the  icon from the horizontal menu and confirm your decision.

### 5.3.6.5. General data

The general data for a numerical program are the same as for a step-by-step program, and they're always accessible via the  icon on the horizontal menu.

### 5.3.6.6. Returning to a numerical program

To return to a numerical program if you have entered the menu, for example, or you've entered manual mode or accessed the general data screen, just press the  icon on the vertical menu.

### 5.3.7. Production Mode

To enter production mode, press the  icon in the vertical menu, irrespective of whether you are creating a step-by-step program or a numerical program. If you do so, the program in question will end.

A finished program is a program suitable for the mass production of parts. That is, a program with the appropriate steps to generate the desired geometry for a certain profile of a certain material. However, despite the term "finished", which is synonymous to a production suitable program, it is possible to delete existing steps (excluding the unloading step, the loading step, the clamping step and the R axis referencing step, which must continue to exist in a finished program) and make corrections or adjustments in the axis heights to get the best results.

Furthermore, to complement these options, there is also the possibility to continue adding steps to the end of a finished program, making it editable again.

So if you want to make last minute corrections when you are in production, such as removing steps, adjusting dimensions, or adding steps to the end of the program, you can return to the program editing mode by bien pressing the  icon on the vertical menu.

You will then be able to edit the currently loaded finished program.




You can access any of the steps comprising the program by directly pressing the corresponding tab (the program is in step 1 in the image shown) or use the navigation arrows to do so.

Remember you can only correct the height of the rollers assigned a height in any step. In the example shown in the previous figure, you can only correct the R axis. If you are in a different step, you can change the heights of the other axes.

To proceed, just press on the height you wish to change. Upon doing so, a window will open where you can enter the new height.




Use the numerical keyboard to make the adjustment to the height of the chosen axis. To confirm, press the "SET" key.

As soon as you finish making the adjustments or corrections in the different steps (if necessary to finish refining the resulting piece), you can return to production mode and begin the series.

On the other hand, if you want to delete an existing step, hover over it by pressing its tab, or by using the navigation arrows. Then press the icon , and accept the confirmation message. Doing so will remove the selected step from the finished program.

However, remember that you cannot delete the unloading step, the loading step, the clamping step or the R referencing step in a finished program as they are required.

And, if you wish, you can also continue adding steps to the end of a finished program in step-by-step mode. To do so, just press the tab +.

In this case, the finished program goes back to editing, as can be seen in the following screen.



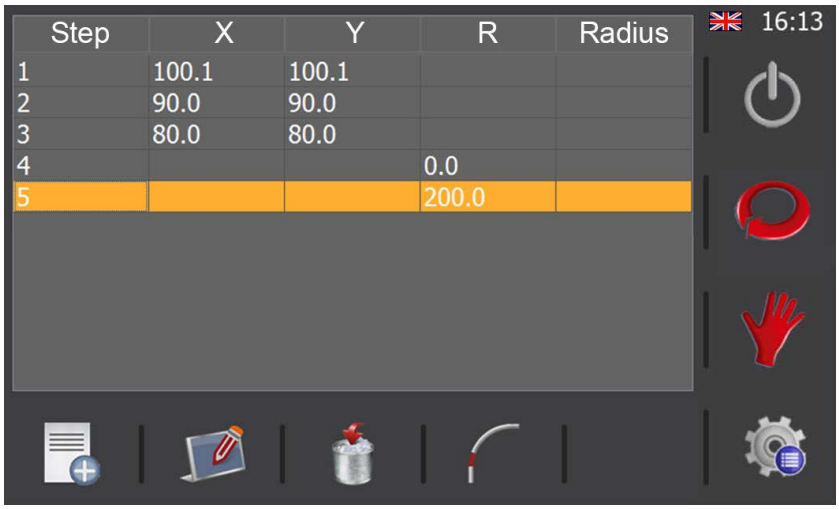

Now, in the new step that is added to the end of those already existing in the program (the sixth in the case of the example that concerns us), you can edit the position of the desired axis. To do so, you must proceed as you have already learned to do during the creation of the steps of a program, using the joystick or performing a direct positioning of said axis. Then, to save this step, press the icon from the lower horizontal menu. Accept the confirmation message and continue creating more steps, if desired, or go into production mode when ready, ending the program again.

To do so, remember to press the icon in the vertical menu at the right. After doing this, you'll see how it changes to this

It's important to mention here that you can also edit finished programs on the step screen. In other words, if you have left production mode and are in editing mode, as shown below:




Press the icon to access the step screen.




From here, the program editing process (adding, editing and deleting steps, pressed interpolations, simultaneous 2 axis interpolations, etc.) is the same as explained in the section entitled "Creating a new numerical program". Once you've made the desired corrections to your program on the step screen, you can return to production mode. To do so, first return to automatic mode by pressing the icon in the vertical right menu and then pressing the icon also situated in said vertical menu.

Now that you are in production mode once again, use the navigation keys or directly press the step tab to move over the second of the two (move over the second step since this is the material loading step). You're now ready to begin producing.

As soon as you press the movement button, the hydraulic pump will start up and the rollers will move to the defined height. In the first three steps (unloading step, loading step and clamping step), the X roller always moves first and then the Y roller. When both axes reach the defined heights, the movement stops and you can release the button. As already mentioned, we're now in the loading step in our example. Therefore, you can now load the profile or pipe to be bent into the machine. If you have paid attention to what has happened on the touchscreen, you will have noted that the program has automatically gone to step 3. In other words, the bending machine is prepared to complete this step. To do so, press the button until the rollers reach the defined height and the clamping step is finished.

The bending machine stops all movement once again and it automatically moves to step 4 or the R axis referencing step on the screen. This means it's now time to put the encoder in the read position (encoder in contact with the profile to be bent). Having done this, press the button again and you'll see how the pull rollers drag the material until it is detected by the photocell at which point each one of the steps in the program will be automatically run to get the end part. You don't have to do anything else other than keep the button pressed down throughout the bending process. This is an important safety requirement as it prevents any type of accident by stopping the movement of the bending machine if the button is released.

As soon as the program ends, all movement of the axes stops and the change is shown on the touchscreen automatically moving to step 1. At this point, the end part is finished and secured by the rollers. If you press the button again, the unloading step will be run positioning the X and Y rollers in a position to release the part. Pay attention so it doesn't fall.

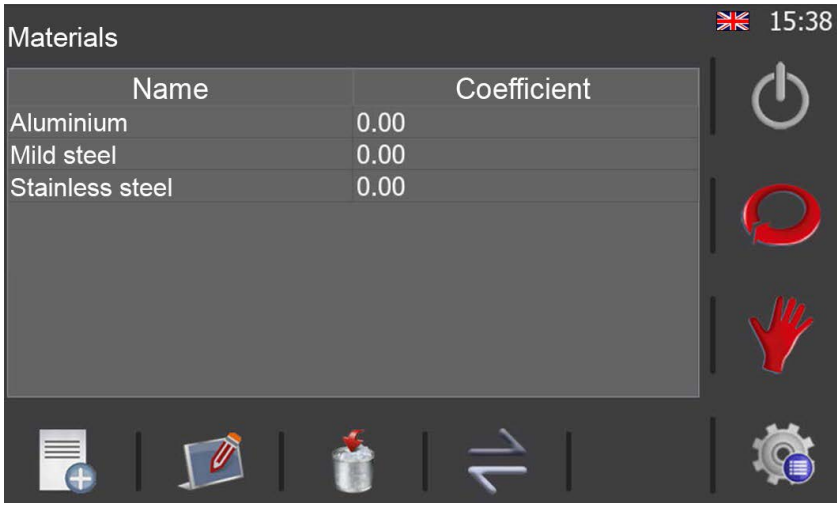
### 5.3.8. Using Materials and Tools

As already explained in the "General Data" section, you can define additional information for a program. This function makes it possible to replicate pieces always using the same conditions (profile type, material, dimensions, position and roller direction, etc.).

Even though the machine is supplied with a database including the most common materials and tools, each customer has their own needs. This means you may need to create new materials or define new rollers to adapt to all situations.

To do so, go to the general menu by pressing the icon that is always found at the bottom right-hand of the screen.

Once in this menu, press the icon for access to the material management screen.




By using the horizontal menu on this screen, you can do the following:

Create a new material

Edit materials

Delete materials

Switch to the tool management screen (custom rollers)

For clarification purposes, remember that each one of the materials is defined by a descriptive name plus a coefficient representing its physical resistance.

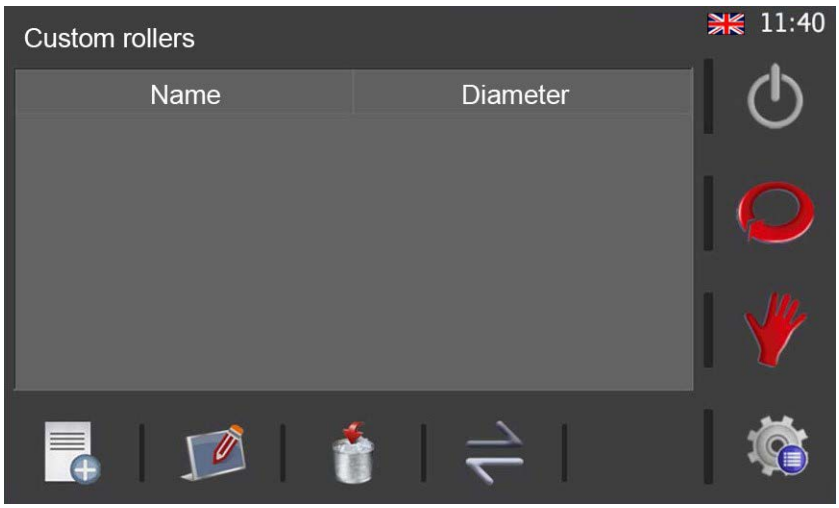
In standard materials you can edit the coefficient, but not the name. Besides, you cannot delete them either because they are an essential part of the material database.

On the other hand, you can create all the additional materials youneed, with any coefficient and with any name, as long as this latter does not already exist in the database.




The bending software is supplied with a very complete tool database as it includes the rollers for flat profiles which come standard with the machine and all other possible rollers for round profiles we normally manufacture or can manufacture upon request. However, each customer is different and this variety means they need to be able to define specific tools or custom rollers.

This is the custom roller management screen:




Just like with the material management screen, the following actions are possible if you press the icons in the horizontal menu:

 Create a new custom roller

 Edit an already-existing custom roller

 Delete a custom roller

 Switch to the material management screen

Remember that each custom roller is defined here only with a descriptive name.

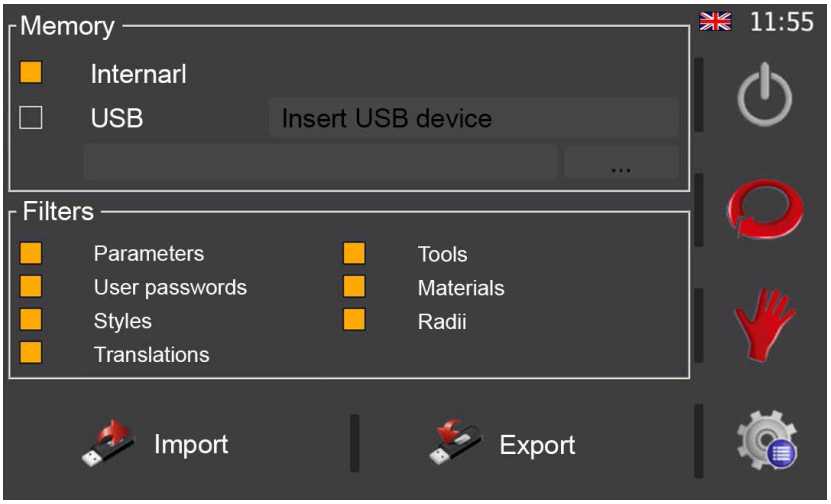


### 5.3.9. Importing and Exporting Data

The same software that runs on the physical machine can be run on a PC with a Windows operating system. This makes it possible to get the operators and technicians who will intervene in the development and production process familiar with the environment they will later use. Si However, remember that it's simply a simulation on a PC and some functions are not available unless done on the machine in question.

Having said this, it is possible to create materials, tools, radiuses or numerical programs on a PC. However, since you won't want to replicate all that work again on the actual machine, you have the "Importing and Exporting Data" screen.

To access it, you must first press the  icon at the bottom right-hand of the screen and then on the  icon in the menu that appears.




This screen allows you to export the data created on the PC and import them into the physical machine. Or vice versa. In other words, data can be exported from the machine and imported to a PC for the desired purpose if an operator has created new materials, tools, radiuses or programs on the machine.

If you pay attention to the middle of the screen, you'll see how the data to be exported or imported is decided under the "Filters" section. Even though only transferring tools, materials, radiuses or programs has been mentioned thus far, there are also other options. They are highly important as they allow you to make backup copies of the machine configuration parameters, add new styles to personalize the look of the software and even define new passwords and add other languages.

All of these data are imported and/or exported using a USB memory stick which can be inserted into the corresponding connector on the control panel. It is also of vital importance to emphasize at this point that you can export and/or import data to the system's internal memory. This allows you to have a backup copy on the machine itself which can be recovered whenever necessary.

### 5.3.10. Alarm Management

The user interface on the bender is not only capable of sending orders to the machine, but it can also show a large quantity of highly useful information to know what is happening at all times.

For example, you will see the following pop-up window clearly indicating an emergency stop if you press the safety button on the control panel.

This pop-up window can be bothersome in certain situations. Therefore, you can close it even though the alarm is still active. To do so, just press the button.




Remember that this window will also automatically close if the alarm disappears. In other words, in line with this example, this window will disappear if you unblock the safety button and press the reset button (always necessary after an alarm goes off).

The question now is how to tell if the system has an activated alarm. You just look to see if the icon appears at the right of the message bar at the top of the screen.

The presence of this icon indicates an active alarm status. To find out exactly what is happening or, in other words, what situation is producing the alarm statuses, just press the icon.

The following screen will appear upon doing this:




Here's a list of all the alarms that have gone off to date and all those which are still active are marked in red. To delete the alarms, they need to be corrected by unblocking the emergency stop button, for example. However, other alarms can be reset by simply pressing the icon.

This resets the active alarms that require no other action, making the system ready to be reset. So, when you return to manual mode, automatic mode or production mode, just press the con to continue working normally.

On the other hand, remember that any notifications and alarms from the two frequency drives controlling the hydraulic pump motor and pull roller rotation motor will remain active (in red) on this list even if you try to delete them by pressing the icon.

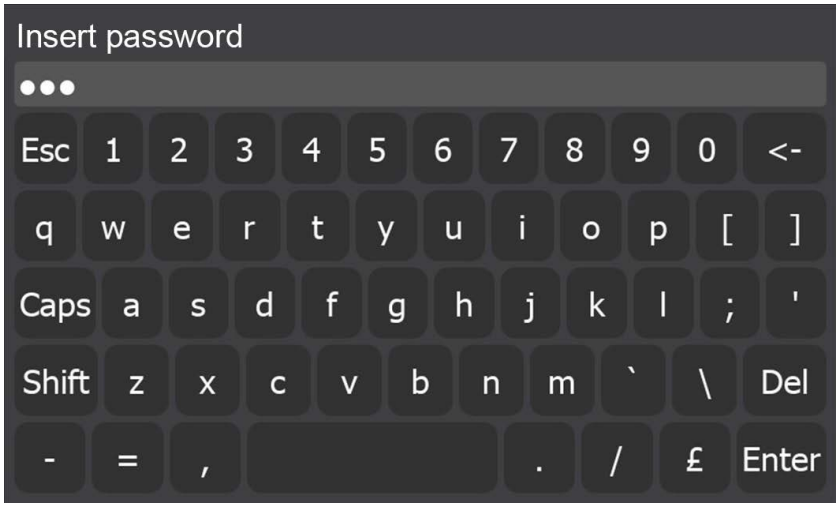
This is due to the origin, which only implies they may be deleted by directly accessing the frequency drive that notified the control software. Thus, in order to proceed correctly, you must access the electrical panel as you learned to do under the "Frequency Drive Notifications and Alarms" section. Open the door and press the STOP/RESET button on the corresponding frequency drive.

If you following this procedure, press the icon from the control software to reset the system and continue operating as normal.

In any case, remember once again that alarms and notifications from the frequency drives are not common unless the mechanical capacities for which the bender was designed have been exceeded. In other words, they only appear to prevent the machine from suffering irreversible damage that may affect its operation.

Besides these alarms, the bending machine is equipped with a greasing alarm that appears upon 850 hours of operation which in the metal industry equals a period of a half a year. Before continuing to operate, the moving parts on the machine such as the pinions that transmit the movement to the axles must be greased.

Once greased adequately, delete the alarm in order to continue working. To do so, access the menu by pressing the icon in the lower right corner of the application. Now, from here, you must press the icon providing access to the alarm management page.




As you can see, you will be asked to enter a password to guarantee you have permission to access it. The password you must enter is "nargesa". Thus, as soon as you have entered it, press the "Enter" key and the following page will open.




Now, to delete the greasing alarm, just press the , icon, return to manual, automatic or production operating mode and reset the system by pressing the icon.

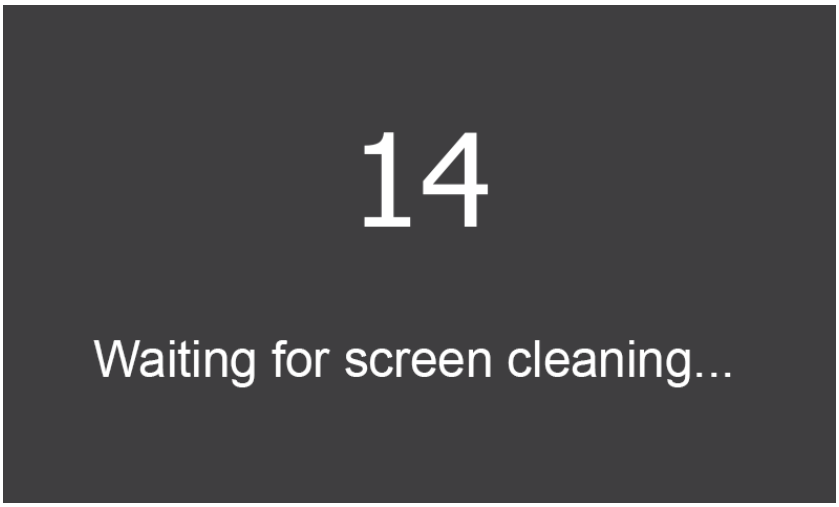
The greasing alarm will reappear repeatedly every 400 operating hours so you will have to follow the procedure described many other times. This will ensure the machine is always working under the best conditions and is properly maintained to prevent problems.

### 5.4. Cleaning the touchscreen

With continuous use of the touchscreen, it can accumulate some dirt which can become a bit annoying as you'll need to repeatedly press the screen to do any type of action. The solution is simple: cleaning the touchscreen with a soft cloth.

Nonetheless, you cannot do this while the bending machine is in certain operating modes as wiping the screen with a cloth will cause an enormous number of pulses which can lead to undesirable actions.

Don't worry. There is a window for this cleaning. Go to the general menu by pressing the  icon in the lower right corner of the screen, and then on the  icon. After doing this, you'll see the following screen:



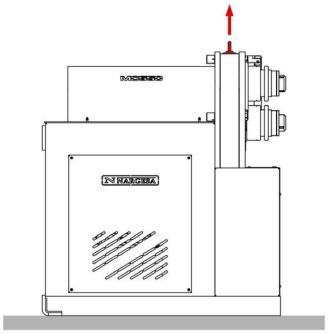

Now, you'll see a 15-second countdown timer. During this time, nothing you do on the screen will have any effect. This simple process gives you a limited amount of time to clean the touchscreen without worrying about any undesirable consequences. The application will automatically return to the general menu after 15 seconds. If you didn't have enough time to completely clean the panel, you can repeat the same operation as often as you wish.

## 5.5. Working position

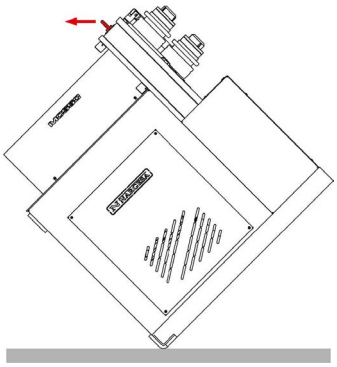
MC550CNC can work with the machine bed horizontal or vertical as needed, according to the work to be done.

To place the bending machine in horizontal position:

1. Secure the machine at the anchor point indicated in the illustration with a forklift.
2. Lift the machine carefully until it is not in contact with the ground



3. Lower it so that the part behind the machine bed is resting on the ground.
4. Using the forklift, carefully move the machine backwards until the machine bed is totally resting on the ground.



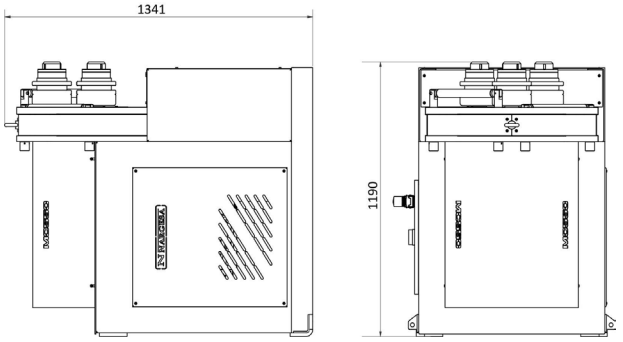



*Figure 13. Machine dimensions with the baseplate in a horizontal position*

**WARNING:** To change the position of the machine from vertical to horizontal or vice versa, it must be switched off and with the emergency stop button pressed.
When carrying out the operation, make sure the control panel and power cables are not caught.

# 6. WARNINGS

The MC550 bending machine is designed and assembled to allow the operator to handle the machine and bend the necessary parts in a completely safe manner. Any change to the machine's structure or characteristics could modify the safety offered by the machine, breaching the EC certificate of conformity and could endanger the operator.

## 6.1. Residual hazards

Hazardous conditions may occur during the bending of materials that must be analysed and prevented.

Attention should be paid to the movements of the piece to be bent and the roller while the material is being introduced into the machine as well as during its shaping. Despite the fact that the forward speed of the rollers is slow, there is a risk of entrapment in the extremities between the rollers and the part.

Users of the machine are recommended to handle the part to be bent firmly with one hand and to move the hand according to the progress of the bending operation in order to maintain a safe distance from the rollers.

It is also necessary to prepare the work area to prevent other operators from injuring themselves during operation of the machine.

## 6.2. Counter-productive methods

Tools or rollers that are not supplied by the manufacturer of the machine, NARGESA S.L., and which have not been specially designed for the MC550 bending machine should never be used .

## 6.3. Other recommendations

- Use gloves for handling the machine and during the bending processes.
- Wear EC-approved goggles and protective boots
- Handle the material at the ends, and never around the area being bent
- Do not work without the protection devices that the machine is fitted with
- Ensure that there is a safe distance between the machine and the operator

## 7. ASSEMBLING OF THE ROLLERS



1. Roller clamping nut
2. Tightening nut of the rollers U80
3. Roller clamp spacer
4. Roller lock washer
5. Roller adjusting Bushing
6. Roller 49
7. Roller 53
8. Roller 28

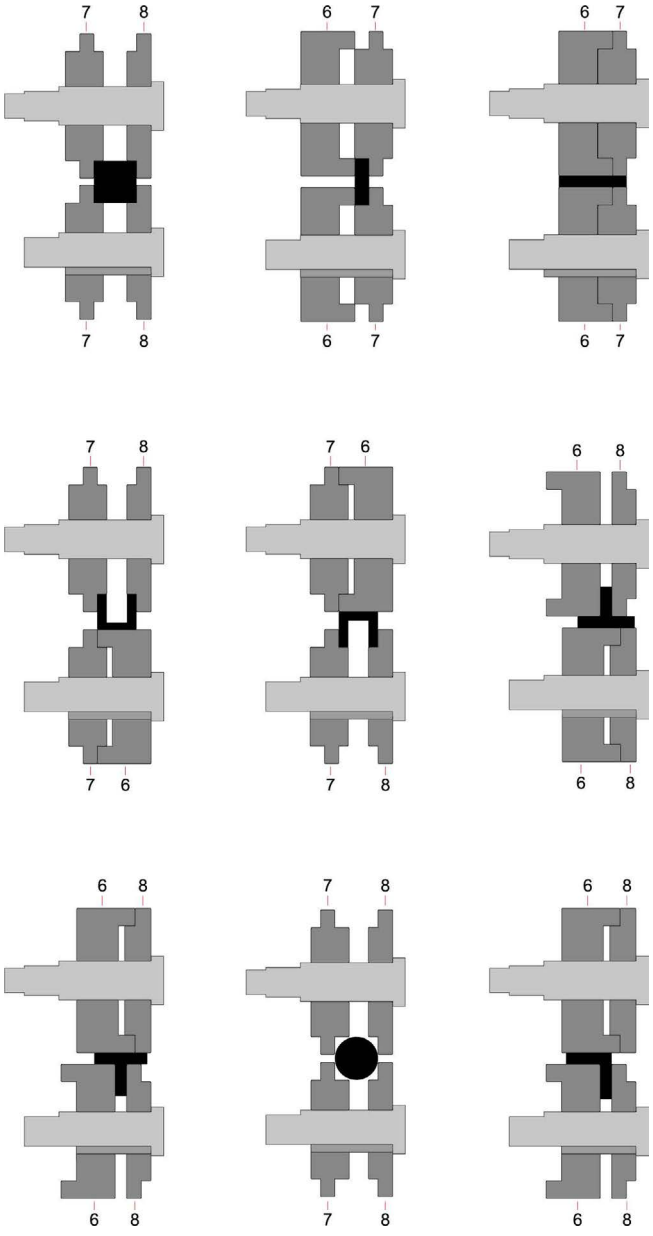



*Figure 14. Nomenclature of the rollers and assembly*

**IMPORTANT NOTE:**
The clamping nut of the rollers should never be tightened with a wrench and only by hand. If pipe rollers are being used, the nuts must be loose.

## 7.1. Bending capacity






| | MC150B | | MC200 | | MC400 | | MC200H | |
|---|---|---|---|---|---|---|---|---|
| Profile | Measures | Min. radius | Measures | Min. radius | Measures | Min. radius | Measures | Min. radius |
| | 50x10 | 300 | 50x10 | 300 | 50x10 | 250 | 60x10 | 200 |
| | 60x20 | 200 | 80x20 | 150 | 80x20 | 150 | 80x20 | 150 |
| | 25x25 | 200 | 30x30 | 200 | 30x30 | 150 | 30x30 | 150 |
| | 50x50x3<br>40x40x3 | 700<br>350 | 50x50x3<br>40x40x3 | 600<br>300 | 50x50x3<br>40x40x3 | 600<br>300 | 50x50x3<br>40x40x3 | 450<br>300 |
| | 40 | 200 | 40 | 200 | 40 | 150 | 40 | 200 |
| | 40 | 250 | 40 | 250 | 40 | 200 | 40 | 250 |
| | 40 | 300 | 40 | 300 | 40 | 250 | 40 | 250 |
| | 50 | 200 | 60 | 300 | 60 | 225 | 60 | 225 |
| | 50 | 250 | 60 | 300 | 60 | 225 | 60 | 225 |
| | 40 | 500 | 40 | 420 | 40 | 200 | 40 | 300 |
| | 25 | 180 | 30 | 150 | 30 | 150 | 30 | 150 |
| | 50,8x3*<br>=2"x3*<br>40x2* | 600<br>600<br>300 | 63,5x3*<br>=2" 1/2x3*<br>40x2* | 500<br>500<br>250 | 63,5x3*<br>=2" 1/2x3*<br>40x2* | 450<br>450<br>200 | 63,5x3*<br>=2" 1/2x3*<br>40x2* | 450<br>450<br>200 |

* *Optional rollers*





| | MC550 · MC550CNC | | MC650 · MC650CNC | |
|---|---|---|---|---|
| Profile | Measures | Min. radius | Measures | Min. radius |
| | 60x15<br>60x8<br>50x15<br>50x10<br>40x8<br>30x5<br>25x5 | 400<br>200<br>350<br>175<br>150<br>110<br>105 | 100x15<br>80x20<br>60x15<br>50x15<br>20x10 ● | 1250<br>450<br>300<br>155<br>140 |
| | 100x20<br>80x20<br>80x15 | 250<br>200<br>180 | 120x20<br>100x25<br>80x20 | 250<br>350<br>200 |
| | 35x35<br>30x30<br>25x25<br>20x20<br>15x15 | 400<br>200<br>175<br>150<br>150 | 45x45<br>40x40<br>25x25 ●<br>20x20 ● | 300<br>280<br>200<br>150 |
| | 60x60x3<br>50x50x3<br>35x35x3 | 800<br>600<br>200 | 70x70x4<br>60x60x3<br>40x40x3 | 750<br>750<br>300 |
| | 70x30x3<br>60x30x3<br>50x30x3 | 500<br>400<br>250 | 80x40x3<br>60x30x3<br>50x30x3 | 500<br>300<br>250 |
| | 60x60x7<br>50x50x6<br>40x40x5 | 300<br>250<br>200 | 80*<br>70<br>60<br>40 | 500<br>400<br>200<br>150 |
| | 60x60x7<br>50x50x6<br>40x40x5 | 500<br>400<br>300 | 80*<br>60<br>40 | 500<br>400<br>150 |
| | 60x60x7<br>50x50x6<br>40x40x5 | 350<br>300<br>250 | 60x8<br>40x6 | 450<br>250 |
| | 40x20x5<br>60x30x6<br>80x45x6 | 160<br>200<br>400 | 120*<br>100*<br>80 | 600<br>600<br>350 |
| | 80x45x6<br>60x30x6<br>40x20x5 | 600<br>250<br>200 | 120*<br>100*<br>80 | 700<br>700<br>400 |
| | 50x5<br>40x5 | 550<br>400 | 70x7<br>60x5<br>50x5<br>40x4 | 600<br>400<br>300<br>250 |

* *Optional rollers* ● *Consult with manufacturer*





| | MC550 · MC550CNC | | MC650 · MC650CNC | |
|---|---|---|---|---|
|  | 50x5*<br>40x4* | 750<br>500 | 50x5*<br>40x4* | 750<br>500 |
|  | 40<br>35<br>30<br>20 | 300<br>250<br>200<br>130 | 50<br>40<br>25 | 300<br>200<br>175 |
|  | 76,2x3* (3"x3)<br>40x2<br>20x2 | 500<br>180<br>100 | 101,6x3,5* (=4"x3)<br>100x3*<br>88,9x4* (=3"SCH)<br>35x2*<br>20x1,5* | 500<br>500<br>700<br>120<br>115 |

* *Optional rollers* ● *Consult with manufacturer*

# 8. OPTIONAL ACCESSORIES

## Set of treated steel rollers



Set of 3 sets of treated steel rollers for steel round pipe or stainless steel, thickness bigger than 2 mm.
When pipe sizes are smaller, two sizes are included in the same roller. Eg. (25 + 30)
*Always clean up the rollers well before using stainless steel not to get the pipe contaminated.*

| Tube size in mm | | |
|---|---|---|
| **Reference** | **Dimensions** | **Weight** |
| 140-08-13-RHT0001 | (25 + 30) | 40,04 Kg. |
| 140-08-13-RHT0002 | (20 + 35) | 39,65 Kg. |
| 140-08-13-RHT0003 | 40 | 39,93 Kg. |
| 140-08-13-RHT0004 | 50 | 36,24 Kg. |
| 140-08-13-RHT0005 | 60 | 31,92 Kg. |
| 140-08-13-RHT0006 | 70 | 28,57 Kg. |
| 140-08-13-RHT0007 | 80 | 23,22 Kg. |
| **For Schedule pipe** | | |
| 140-08-13-RHISOT0001 | (3/8" + 1/2") = (17,2 + 21,3 mm) | 43,53 Kg. |
| 140-08-13-RHISOT0002 | (1" + 3/4") = (33,7 + 26,9 mm) | 38,57 Kg. |
| 140-08-13-RHISOT0003 | 1" 1/4 = 42,4 mm | 39,11 Kg. |
| 140-08-13-RHISOT0004 | 1" 1/2 = 48,3 mm | 36,91 Kg. |
| 140-08-13-RHISOT0005 | 2" = 60,3 mm | 31,77 Kg. |
| 140-08-13-RHISOT0006 | 2" 1/2 = 73 mm | 27,01 Kg. |
| **For inches pipe** | | |
| 140-08-13-RHWT0001 | (1/2"+1"1/4) = (12,70 + 31,75 mm) | 41,67 Kg. |
| 140-08-13-RHWT0002 | (1"+3/4") = (25,40 + 19,05 mm) | 42,35 Kg. |
| 140-08-13-RHWT0003 | 1"1/2 = 38,1 mm | 40,56 Kg. |
| 140-08-13-RHWT0004 | 2" = 50,8 mm | 35,92 Kg. |
| 140-08-13-RHWT0005 | 2"1/2 = 63,5 mm | 30,28 Kg. |
| 140-08-13-RHWT0006 | 3" = 76,2 mm | 25,31 Kg. |

## Set of Sustarín rollers

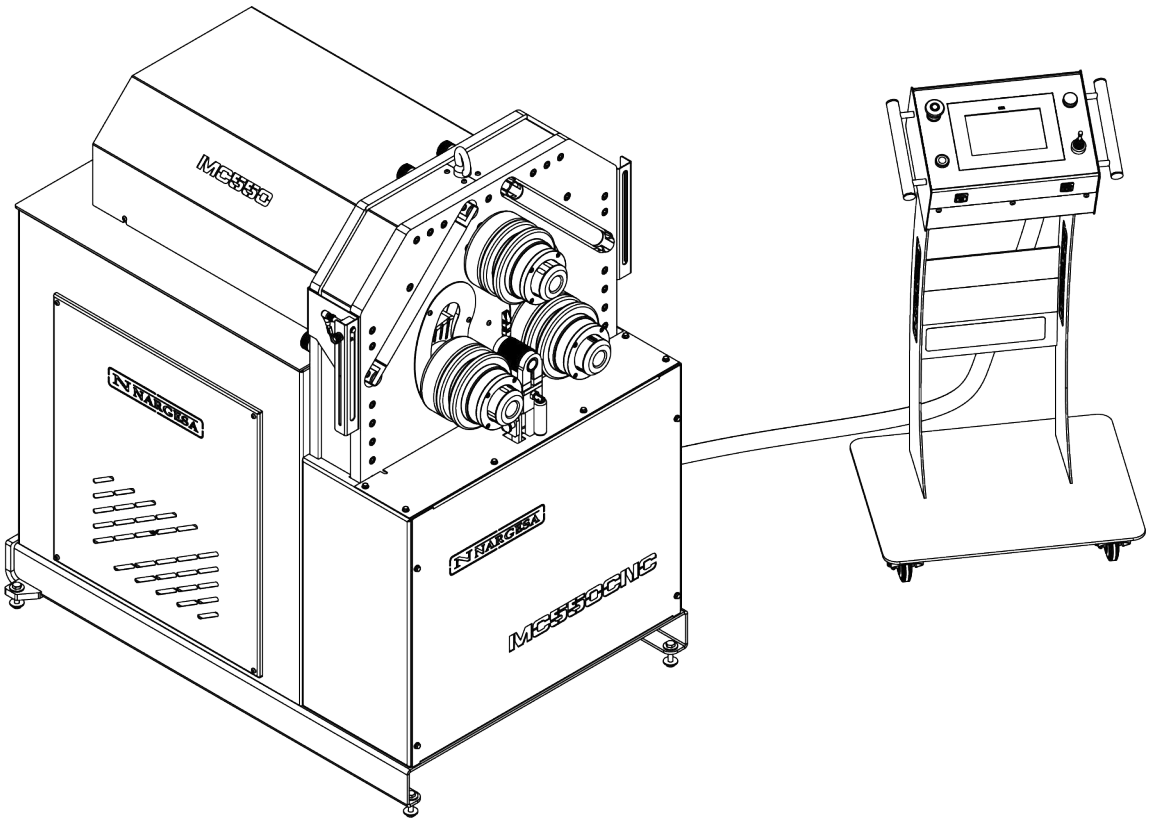


Set of 3 Sustarin rollers for stainless steel pipes, aluminium and delicate materials for thickness smaller than 2.5 mm.
When pipe sizes are smaller, two sizes are included in the same roller. Eg. (25 + 30)
Ej. (25 + 30) o (1/2" + 1"1/4")
*Susterin rollers do not spoil or contaminate the pipe.*
***For any other size or profile please ask the manufacturer.***

| Tube size in mm | | |
|---|---|---|
| **Reference** | **Dimensions** | **Weight** |
| 140-08-13-RI0001 | (25 + 30) | 7,24 Kg. |
| 140-08-13-RI0002 | (20 + 35) | 7,17 Kg. |
| 140-08-13-RI0003 | 40 | 7,22 Kg. |
| 140-08-13-RI0004 | 50 | 6,55 Kg. |
| 140-08-13-RI0005 | 60 | 5,77 Kg. |
| 140-08-13-RI0006 | 70 | 5,17 Kg. |
| 140-08-13-RI0007 | 80 | 4,20 Kg. |
| **For Schedule pipe** | | |
| 140-08-13-RIISO0001 | (3/8" + 1/2") = (17,2 + 21,3 mm) | 7,87 Kg. |
| 140-08-13-RIISO0002 | (1" + 3/4") = (33,7 + 26,9 mm) | 6,98 Kg. |
| 140-08-13-RIISO0003 | 1" 1/4 = 42,4 mm | 7,07 Kg. |
| 140-08-13-RIISO0004 | 1" 1/2 = 48,3 mm | 6,68 Kg. |
| 140-08-13-RIISO0005 | 2" = 60,3 mm | 5,75 Kg. |
| 140-08-13-RIISO0006 | 2" 1/2 = 73 mm | 4,89 Kg. |
| **For inches pipe** | | |
| 140-08-13-RIWT0001 | (1/2"+1"1/4) = (12,70 + 31,75 mm) | 7,54 Kg. |
| 140-08-13-RIWT0002 | (1"+3/4") = (25,40 + 19,05 mm) | 7,66 Kg. |
| 140-08-13-RIWT0003 | 1"1/2 = 38,1 mm | 7,33 Kg. |
| 140-08-13-RIWT0004 | 2" = 50,8 mm | 6,50 Kg. |
| 140-08-13-RIWT0005 | 2"1/2 = 63,5 mm | 5,47 Kg. |
| 140-08-13-RIWT0006 | 3" = 76,2 mm | 4,58 Kg. |

# TECHNICAL ANNEX

# MC550CNC Bending Machine

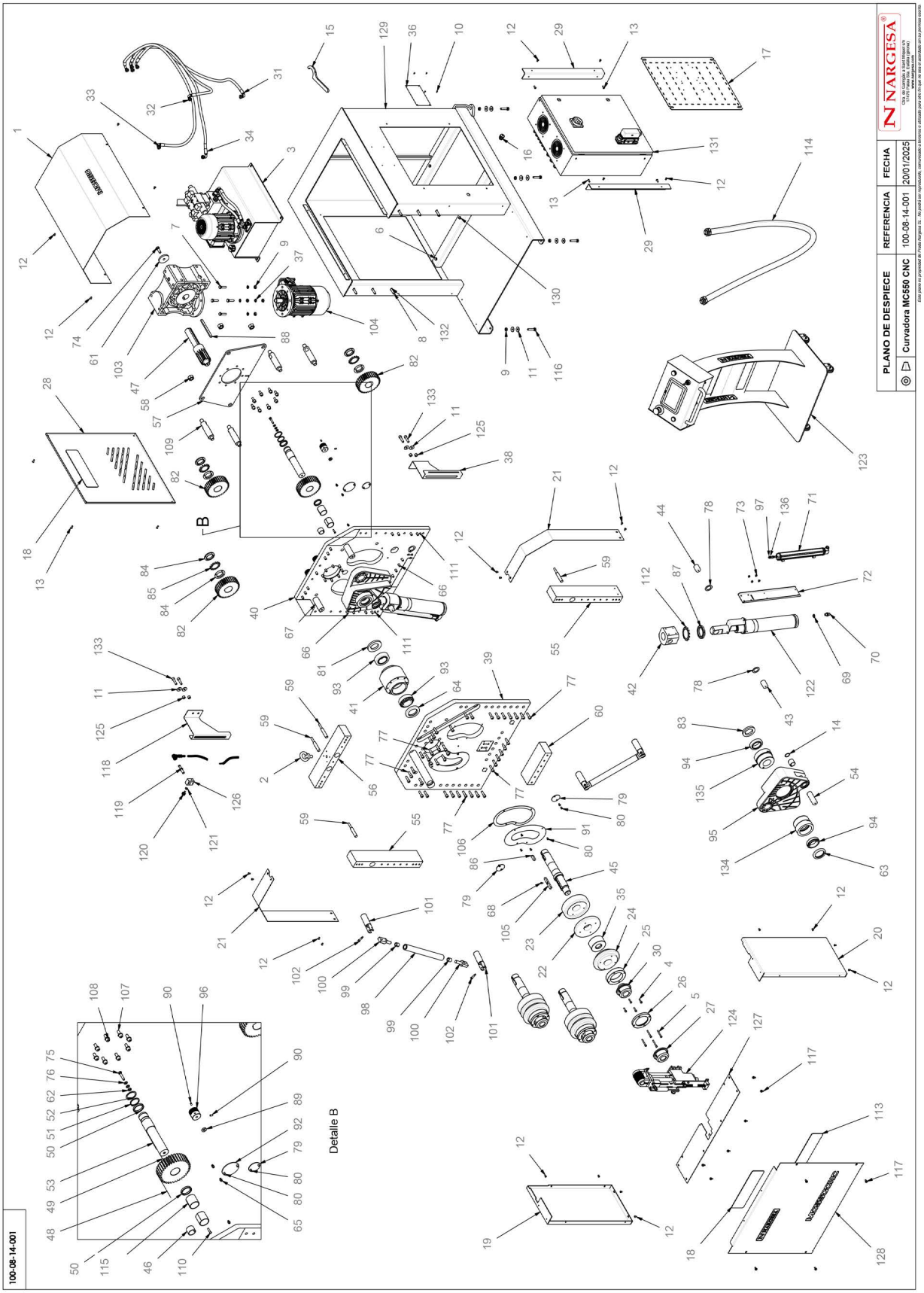


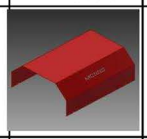
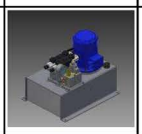

**PRADA NARGESA, S.L**
Ctra. de Garrigàs a Sant Miquel s/n · 17476 Palau de Santa Eulàlia (Girona) SPAIN
Tel. +34 972568085 · nargesa@nargesa.com · www.nargesa.com

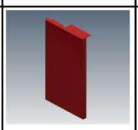
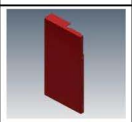
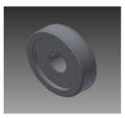
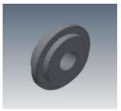
# CONTENTS

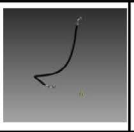
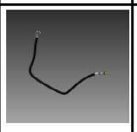
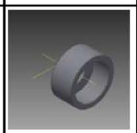
A1. General parts diagram ..... 4
A2. Hydraulic group ..... 17
A3. Encoder group ..... 20
A4. Encoder ..... 23
A5. Hydraulic cylinder ..... 25
A6. Control panel ..... 27
A7. Electric boxes ..... 28
A8. Arrangement of axes ..... 31
A9. Control unit ..... 32
A10. Hydraulic group ..... 33
A11. Electric maps ..... 34
A12. Hydraulic map ..... 42

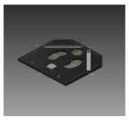
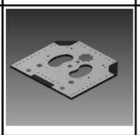
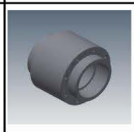
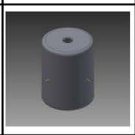
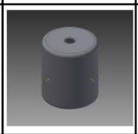
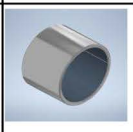
## A1. General parts diagram

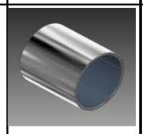
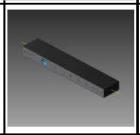
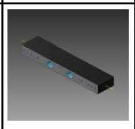
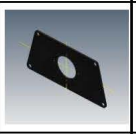
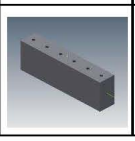


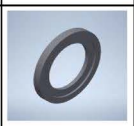
| Elemento | Miniatura | Nº de Pieza | Descripción | CTDAD |
|---|---|---|---|---|
| 1 |  | 130-08-13-00009 | Conjunto Tapa Superior Trasera | 1 |
| 2 |  | 020-D580-M16X2-ZN | Cancamo Macho Din580 M16X2 - Zn | 1 |
| 3 |  | 130-08-08-00022 | GRUPO HIDRAULICO MC650 I MC550 | 1 |
| 4 |  | 020-D912-M6X25 | Tornillo Allen DIN912 M6X25 | 12 |
| 5 |  | 020-D912-M6X50 | Tornillo Allen DIN 912 M6X50 | 12 |
| 6 |  | 020-D933-M8X12 | TORNILLO HEXAGONAL DIN 933 M8X12 | 4 |
| 7 |  | 020-D933-M10X40 | Tormillo Hexagonal DIN933 M10X40 | 4 |
| 8 |  | 020-D933-M10X45 | Tornillo Hexagonal DIN933 M10X45 | 6 |
| 9 |  | 020-D934-M10 | Tuerca Hexagonal DIN934 M10 | 8 |
| 10 |  | 020-D7337-3X8 | Remache De Clavo DIN7337 De Al D3X8 | 4 |
| 11 |  | 020-D9021-M10 | Arandela DIN 9021 M10 | 12 |
| 12 |  | 020-I7380-M6X10 | Tornillo Allen Abombado ISO 7380 M6X10 | 24 |

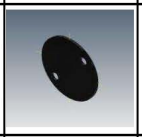
| Elemento | Miniatura | Nº de Pieza | Descripción | CTDAD |
|---|---|---|---|---|
| 13 |  | 020-I7380-M6X16 | Tornillo Allen Abombado ISO7380 M6X16 | 8 |
| 14 |  | 030-DIN472-30X1C2 | Circlip Agujero Din472 D30X1,2 | 2 |
| 15 |  | 031-LLGU-00001 | Llave Gancho Con Uña 80/90 | 1 |
| 16 |  | 050-PE-00011 | Prensaestopa M20X1.5 | 1 |
| 17 |  | 120-08-08-00286 | Chapa Montaje Cuadro | 1 |
| 18 |  | 120-08-12-00081 | Metacrilato Negro Tapa Frontal Logo Nargesa | 4 |
| 19 |  | 120-08-13-00074 | Tapa Lateral Izquierda | 1 |
| 20 |  | 120-08-13-00076 | Tapa Lateral Derecha | 1 |
| 21 |  | 120-08-13-00091 | Tapa Cubierta Entre Oxicortes | 2 |
| 22 |  | 120-08-13-00093 | Rodilllo 3 D170/130X28 Eje de 50 | 3 |
| 23 |  | 120-08-13-00094 | Rodillo 1 D170X49 Eje de 50 | 3 |
| 24 |  | 120-08-13-00095 | Rodillo 2 D170/130X53 Eje de 50 | 3 |

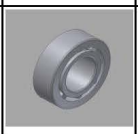
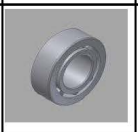
| Elemento | Miniatura | Nº de Pieza | Descripción | CTDAD |
|---|---|---|---|---|
| 25 |  | 120-08-13-00096 | Separador de Apriete de los Rodillos | 3 |
| 26 |  | 120-08-13-00097 | Arandela de Apriete de los Rodillos | 3 |
| 27 |  | 120-08-13-00098 | Tuerca de Apriete de los Rodillos | 3 |
| 28 |  | 120-08-13-00112 | Tapa Lateral | 1 |
| 29 |  | 120-08-13-00128 | Soporte Cuadro Eléctrico | 2 |
| 30 |  | 120-08-13-00153 | Tuerca U80 | 3 |
| 31 |  | 120-08-13-00159 | Manguera Hidráulica 1/4" - Codo 90º TG 1/4" - Codo 90º TG 1/4" - 250 bars, L=1150 mm - Conexiones orientadas a 90º ISO 17165-1 | 1 |
| 32 |  | 120-08-13-00160 | Manguera Hidráulica 1/4" - Codo 90º TG 1/4" - Codo 90º TG 1/4" - 250 bars, L=1300 mm - Conexiones orientadas a 270º ISO 17165-1 | 1 |
| 33 |  | 120-08-13-00161 | Manguera Hidráulica 1/4" - Codo 90º TG 1/4" - Codo 90º TG 1/4" - 250 bars, L=1300 mm - Conexiones orientadas a 270º ISO 17165-1 | 1 |
| 34 |  | 120-08-13-00162 | Manguera Hidráulica 1/4" - Codo 90º TG 1/4" - Codo 90º TG 1/4" - 250 bars, L=1150 mm - Conexiones orientadas a 90º ISO 17165-1 | 1 |
| 35 |  | 120-08-13-00174 | Arandela De Vaso MC550 | 3 |
| 36 |  | 122-PLC-0813-001 | Placa Características MC650 | 1 |

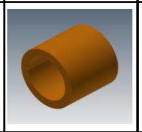
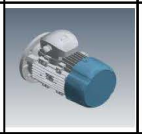
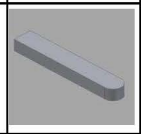
| Elemento | Miniatura | Nº de Pieza | Descripción | CTDAD |
|---|---|---|---|---|
| 37 |  | 020-D127-M10 | ARANDELA GLOWER DIN127 PARA M10 | 4 |
| 38 |  | 125-08-13-01022 | Soporte Sensor Fotoeléctrico | 1 |
| 39 |  | 120-08-13-00043 | Oxicorte Frontal | 1 |
| 40 |  | 120-08-13-00044 | Oxicorte Trasero | 1 |
| 41 |  | 120-08-13-00009 | Buje del Eje Superior | 1 |
| 42 |  | 120-08-13-00045 | Soporte Pivotante del Pistón | 2 |
| 43 |  | 120-08-13-00115 | Pasador Cromado D30 Frontal Pivote del Pistón | 2 |
| 44 |  | 120-08-13-00046 | Pasdor Cromado D30 Trasero Pivote del Pistón | 2 |
| 45 |  | 120-08-13-00123 | Eje de Rodillos | 3 |
| 46 |  | 030-DP-00012 | Dolla Partida D30XD34X25 | 1 |
| 47 |  | 120-08-13-00105 | Piñón Conductor Central Z14 M4 | 1 |
| 48 |  | 120-08-13-00103 | Engranaje de Reenvío Z35 M4 | 1 |

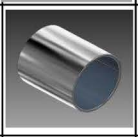
| Elemento | Miniatura | Nº de Pieza | Descripción | CTDAD |
|---|---|---|---|---|
| 49 |  | 120-08-13-00021 | Eje Central Pivote Bielas | 1 |
| 50 |  | 120-08-13-00027 | Arandela De Bronce Eje Central | 2 |
| 51 |  | 030-D471-00005 | Circlip de Eje DIN 471 D40 | 1 |
| 52 |  | 120-08-13-00029 | Arandela Trasera Eje Central D49XD40.2X2 | 1 |
| 53 |  | 030-DP-00017 | DOLLA PARTIDA D40XD44X50 | 1 |
| 54 |  | 120-08-13-00059 | Pasador Cromado Bielas-Pistón | 2 |
| 55 |  | 120-08-13-00060 | Pasamano Lateral de Separación de Oxicortes | 2 |
| 56 |  | 120-08-13-00062 | Pasamano Superior de Separación de Oxicortes | 1 |
| 57 |  | 120-08-13-00028 | Soporte del Reductor | 1 |
| 58 |  | 020-D934-M20 | Tuerca DIN 934 M20 | 4 |
| 59 |  | 120-08-13-00072 | Varilla Roscada Empujadores | 4 |
| 60 |  | 120-08-13-00075 | Pasamano Inferior de Separación de Oxicortes | 1 |

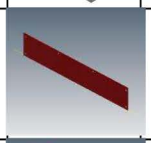
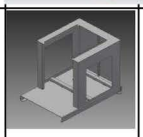
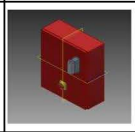
| Elemento | Miniatura | Nº de Pieza | Descripción | CTDAD |
|---|---|---|---|---|
| 61 |  | 120-08-13-00078 | Arandela Fijacion Eje Reductor | 1 |
| 62 |  | 020-D934-M8 | Tuerca Hexagonal DIN 934 M8 | 1 |
| 63 |  | 040-RET-00018 | Reten TC D60x80x10 | 2 |
| 64 |  | 040-RET-00017 | Reten TC D60x90x13 | 1 |
| 65 |  | 020-D71412-00002 | Engrasador DIN 71412 M8X1.25 Recto | 5 |
| 66 |  | 020-D912-M10X30 | Tornillo Allen DIN 912 M10X30 | 31 |
| 67 |  | 120-08-13-00092 | Redondo de Separación de Oxicortes | 2 |
| 68 |  | 020-D6912-M5X12 | Tornillo Allen de Cabeza Reducida DIN 6912 M5 x 12 | 3 |
| 69 |  | 040-JMG-00002 | Junta Metal Goma 1/4' Gas | 2 |
| 70 |  | 040-RMM-00002 | Racor 1/4" Macho Macho | 2 |
| 71 |  | 050-RTL-00250 | Potenciometro Lineal OPKON RTL 5kOhm Rep <0.01mm C=250mm con Adaptador Flexible M4 | 2 |
| 72 |  | 120-08-13-00107 | Soporte del Encoder | 2 |

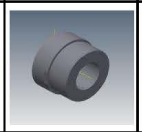
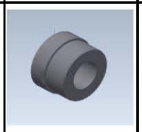
| Elemento | Miniatura | Nº de Pieza | Descripción | CTDAD |
|---|---|---|---|---|
| 73 |  | 020-I7380-M6X8 | Tornillo Allen Abombado ISO7380 M6X8 | 8 |
| 74 |  | 020-D933-M12X35 | Tornillo Hexagonal DIN 933 M12X35 | 1 |
| 75 |  | 020-D933-M8X40 | Tornillo Hexagonal DIN 933 M8X40 | 1 |
| 76 |  | 020-D125B-M8 | Arandela Biselada DIN 125B M8 | 2 |
| 77 |  | 020-D912-M10X35 | Tornillo Allen DIN 912 M10X35 | 41 |
| 78 |  | 120-08-13-00116 | Arandela Anti-rozamiento | 4 |
| 79 |  | 120-08-13-00119 | Tapa del Bulón Pivote del Pistón | 4 |
| 80 |  | 020-I7380-M6X10 | Tornillo Allen Abombado ISO 7380 M6X10 | 20 |
| 81 |  | 120-08-13-00121 | Arandela Piñón Z35 M4 Eje Central | 1 |
| 82 |  | 120-08-13-00120 | Piñón Ejes Rulinas Z35 M4 L40 | 3 |
| 83 |  | 120-08-13-00122 | Arandela Piñón Z35 M4 Ejes Laterales | 2 |
| 84 |  | 020-D981-KM9 | Tuerca Ranurada KM9 M45x150 | 6 |

| Elemento | Miniatura | Nº de Pieza | Descripción | CTDAD |
|---|---|---|---|---|
| 85 |  | 020-D5406-MB9 | Arandela de Fijación MB9 | 3 |
| 86 |  | 030-D6885A-00045 | Chaveta Paralela DIN 6885A 14X9X40 | 3 |
| 87 |  | 020-D981-KM12 | Tuerca Ranurada DIN 981 M60x2 KM12 | 2 |
| 88 |  | 120-08-13-00147 | Chaveta Eje Motor | 1 |
| 89 |  | 120-08-13-00149 | Arandela Bronce Pomos | 4 |
| 90 |  | 020-D913-M6X12 | ESPARRAGO ALLEN DIN 913 M6X12 | 8 |
| 91 |  | 120-08-13-00150 | Tapa Ejes Oxicortes | 2 |
| 92 |  | 120-08-13-00152 | Tapa Extracción Bulón Pistón | 2 |
| 93 |  | 030-CJ-00040 | Rodamiento de Rodillos Cónicos 33210 D50xD90x32 | 2 |
| 94 |  | 030-CJ-00039 | Rodamiento de Rodillos Cónicos 32010 50X80X20 | 4 |
| 95 |  | 120-08-13-00090 | Oxicorte de Bielas | 2 |
| 96 |  | 120-08-13-00148 | Maneta Empujadores | 4 |

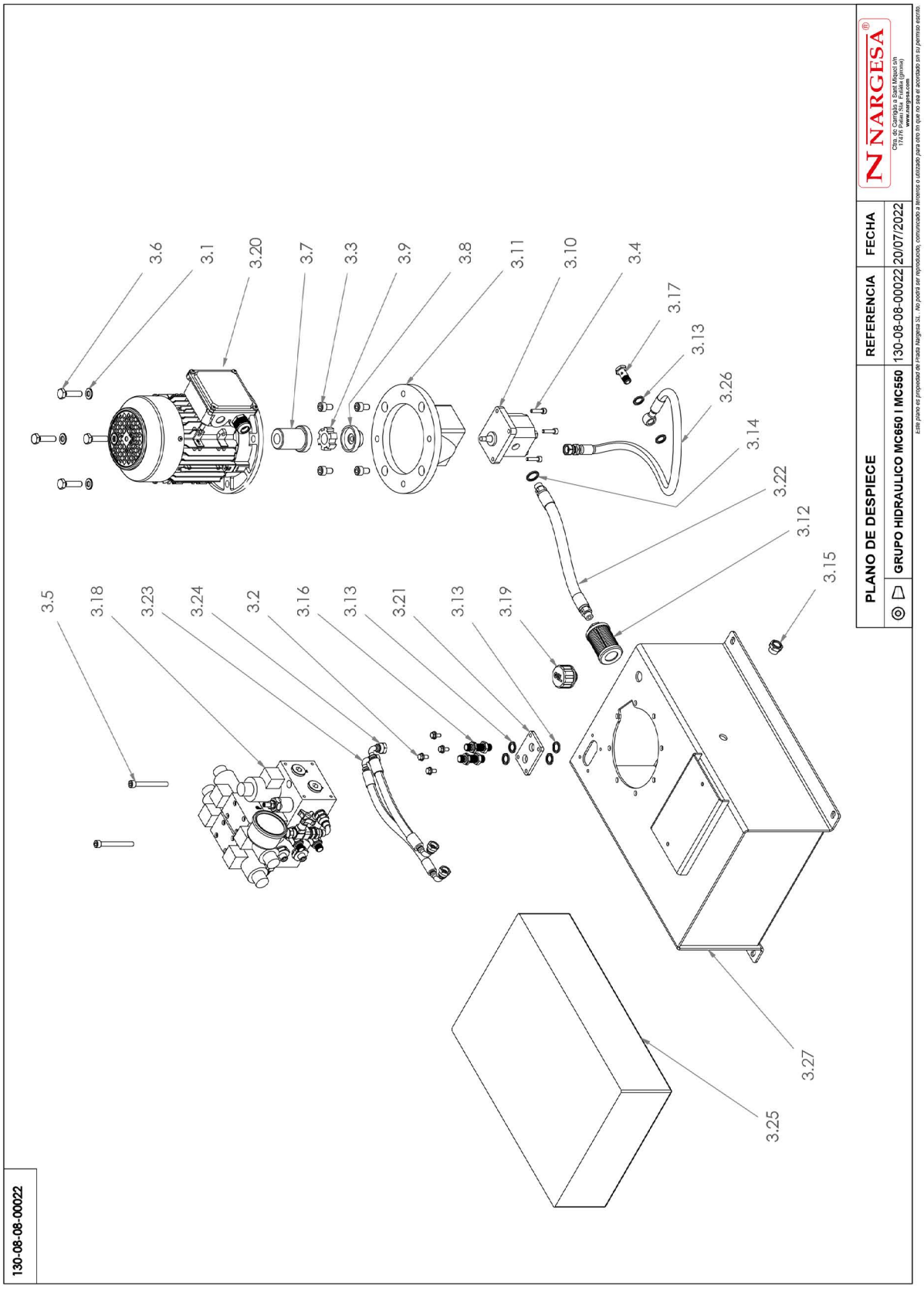
| Elemento | Miniatura | Nº de Pieza | Descripción | CTDAD |
|---|---|---|---|---|
| 97 |  | 020-D985-M6 | Tuerca Autoblocante DIN 985 M6 | 2 |
| 98 |  | 120-08-13-00065 | Barra Rodillo del Empujador | 2 |
| 99 |  | 030-DP-00010 | Casquillo Bronce D16xD22x20 | 4 |
| 100 |  | 120-08-13-00070 | Cabeza del Empujador | 4 |
| 101 |  | 120-08-13-00069 | Horquilla Empujador | 4 |
| 102 |  | 020-I7379-D8X25 | Tornillo Guía ISO 7379 D8X25-M6 | 4 |
| 103 |  | 050-RT-00009 | Reductor BOX110 i:80 Dout42 Dm24 P90B5 | 1 |
| 104 |  | 050-ME-00025 | Motor 90L B5 1.5 Kw 230/400 | 1 |
| 105 |  | 120-08-13-00165 | Chaveta Paralela 1 Lado Recto DIN 6885AB 14X9X90 | 3 |
| 106 |  | 120-08-13-00175 | Tapa Ejes Oxicortes | 2 |
| 107 |  | 020-D912-M10X25 | Tornillo Allen DIN 912 M10X25 | 8 |
| 108 |  | 020-D125B-M10 | Arandela Biselada DIN 125B M10 | 8 |

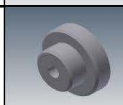
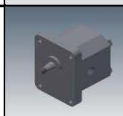
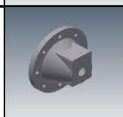
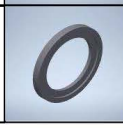
| Elemento | Miniatura | Nº de Pieza | Descripción | CTDAD |
|---|---|---|---|---|
| 109 |  | 120-08-13-00111 | Redondo de Separación del Soporte del Reductor | 4 |
| 110 |  | 020-I7380-M6X25 | TORNILLO ALLEN ABOMBADO ISO7380 M6X25 | 1 |
| 111 |  | 030-DIN7979D-8X20 | PASADOR CILINDRICO DIN 7979D Ø8X20 | 8 |
| 112 |  | 020-D5406-MB12 | Arandela de Fijación MB12 - DIN 5406 | 2 |
| 113 |  | 120-08-12-00082 | Metacrilato Negro Tapa Frontal Logo MC650 | 1 |
| 114 |  | 130-08-13-00034 | Tubo Protección del Cableado Pupitre - Máquina | 1 |
| 115 |  | 030-DP-00058 | DOLLA PARTIDA D40XD44X45 | 2 |
| 116 |  | 020-D933-M10X50 | Tornillo Hexagonal DIN 933 M10x50 | 4 |
| 117 |  | 020-D6921-M6X12 | Tornillo Hexagonal Embridado M6X12 | 10 |
| 118 |  | 125-08-13-01021 | Soporte Sensor Fotoeléctrico | 1 |
| 119 |  | 050-IND-00006 | DETECTOR DIELL M12 PNP DM7/OP-1H | 1 |
| 120 |  | 031-POMM-00011 | POMO REDONDO D20 M6X10 | 1 |

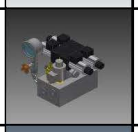
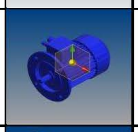
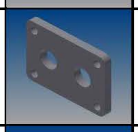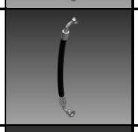
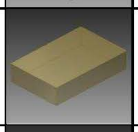
| Elemento | Miniatura | Nº de Pieza | Descripción | CTDAD |
|---|---|---|---|---|
| 121 |  | 020-D9021-M6 | Arandela Ancha DIN9021 Para M6 | 1 |
| 122 |  | 130-08-13-00012 | Pistón Curvadora MC550 | 2 |
| 123 |  | 130-08-08-00157 | Pupitre MC650 | 1 |
| 124 |  | 131-08-13-01000 | Conjunto Encoder / Sensor Fotoeléctrico | 1 |
| 125 |  | 125-08-13-01020 | Casquillo Distanciador | 4 |
| 126 |  | 125-08-13-01023 | Dado Guiador | 1 |
| 127 |  | 125-08-13-01024 | Tapa Superior Cubierta | 1 |
| 128 |  | 125-08-13-01025 | Tapa Frontal MC550 CNC | 1 |
| 129 |  | 130-08-13-00006 | Chasis Curvadora MC550 | 1 |
| 130 |  | 020-D125B-M8 | Arandela Biselada DIN 125B M8 | 4 |
| 131 |  | 050-KIE-0812-003 | Cuadro Eléctrico MC650CNC | 1 |
| 132 |  | 020-D125B-M10 | Arandela Biselada DIN 125B M10 | 6 |

| Elemento | Miniatura | Nº de Pieza | Descripción | CTDAD |
|---|---|---|---|---|
| 133 |  | 020-D912-M10X40 | TORNILLO ALLEN DIN 912 M10X40 | 4 |
| 134 |  | 120-08-13-00117 | Buje de Ejes Laterales Parte Frontal | 2 |
| 135 |  | 120-08-13-00118 | Buje de Ejes Laterales Parte Trasera | 2 |
| 136 |  | 020-D934-M6 | Tuerca Hexagonal DIN 934 M6 | 2 |

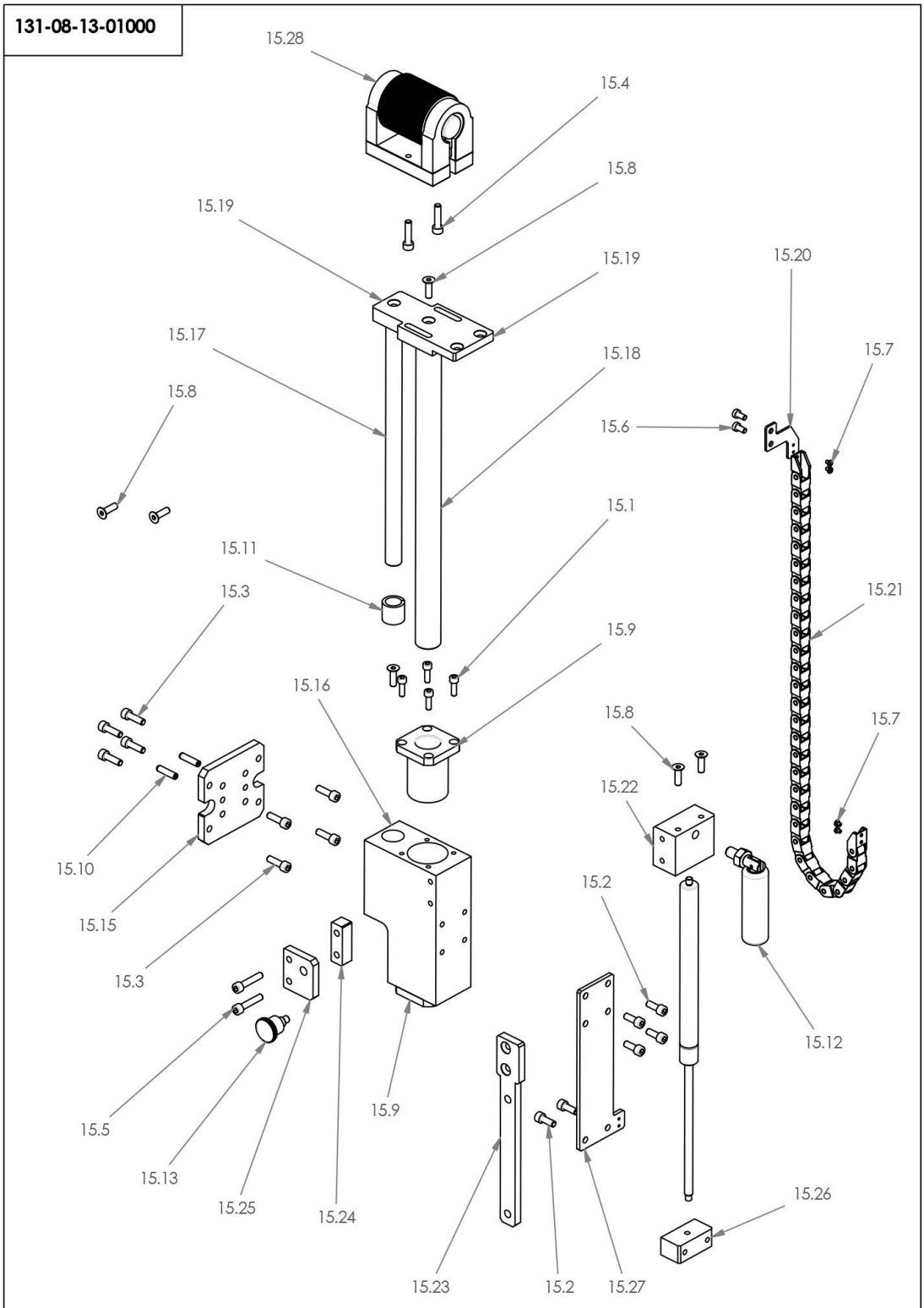
## A2. Hydraulic group



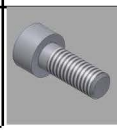
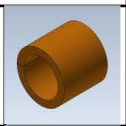
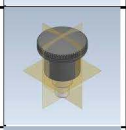
| Elemento | Miniatura | Nº de pieza | Descripción | CTDAD |
|---|---|---|---|---|
| 3.1 |  | 020-D125B-M10 | Arandela Biselada DIN125B Para M10 | 4 |
| 3.2 |  | 020-D6921-M6X12 | Tornillo Hexagonal Embridado M6X12 | 4 |
| 3.3 |  | 020-D912-M10X16 | Tornillo Allen DIN912 M10X16 | 4 |
| 3.4 |  | 020-D912-M6X25 | Tornillo Allen DIN912 M6X25 | 4 |
| 3.5 |  | 020-D912-M8X75 | Tornillo Allen DIN912 M8X75 | 2 |
| 3.6 |  | 020-D933-M10X40 | Tornillo Hexagonal DIN933 M10X40 | 4 |
| 3.7 |  | 040-AE-00011 | ACOPLAMIENTO LADO MOTOR 0.75 Kw BOMBA LO | 1 |
| 3.8 |  | 040-AE-00012 | ACOPLAMIENTO LADO BOMBA LO | 1 |
| 3.9 |  | 040-AE-00013 | ESTRELLA ACOPLAMIENTO 0.75KW BOMBA LO | 1 |
| 3.10 |  | 040-BH-00004 | BOMBA HIDRAULICA DE ALUMINIO DE 1.5 L | 1 |
| 3.11 |  | 040-CA-00003 | CAMPANA ACOPLAMIENTO BOMBA LO MOTOR 0.75/1 CV (SIN ROSCA) | 1 |
| 3.12 |  | 040-FL-00005 | Filtro De Aspiracion 3/8" Largo de 90 | 1 |
| 3.13 |  | 040-JMG-00002 | Junta Metal Goma 1/4" Gas | 6 |
| 3.14 |  | 040-JMG-00004 | Junta Metal Goma 3/8" Gas | 1 |

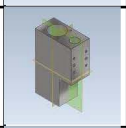
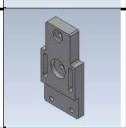
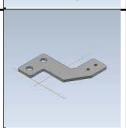
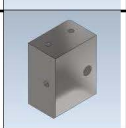
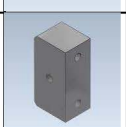
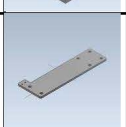
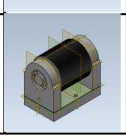
| Elemento | Miniatura | Nº de pieza | Descripción | CTDAD |
|---|---|---|---|---|
| 3.15 |  | 040-NA-00001 | Visor Nivel Aceite De 3/8" Gas | 1 |
| 3.16 |  | 040-PST-00003 | Pasatabique 1/4" | 2 |
| 3.17 |  | 040-TES-00002 | TORNILLO PARA ESFERA DE 1/4" | 1 |
| 3.18 |  | 130-08-08-00063 | Bloque de Electroválvulas MC650 & MC550 | 1 |
| 3.19 |  | 040-TLL-00003 | Tapon Llenado De 1/2" Doble Respiradero Y Filtro | 1 |
| 3.20 |  | 050-ME-00007 | MOTOR ELECTRICO 0.75KW A 1400 rpm - BRIDA B5 | 1 |
| 3.21 |  | 120-08-08-00106 | PLACA PORTA PASATABIQUES | 1 |
| 3.22 |  | 120-08-08-00148 | Manguera Flexible 3/8" - Macho - Macho 3/8" - L=230 mm, Pmin=250 Bars | 1 |
| 3.23 |  | 120-08-08-00149 | Manguera 1/4"-Codo 90º TG 1/4" BSP cono 60° - Codo 90º TG 1/4" cono 60° - 250 bar, L=350 mm - Conexiones a 270° ISO 17165-1 | 1 |
| 3.24 |  | 120-08-08-00150 | Manguera 1/4"-Codo 90º TG 1/4" BSP cono 60° - Codo 90º TG 1/4" cono 60° - 250 bar, L=305 mm - Conexiones a 270° ISO 17165-1 | 1 |
| 3.25 |  | 120-08-08-00152 | Aceite Hidraulico ISO HM 68 - 16 Litros | 1 |
| 3.26 |  | 120-08-08-00257 | Manguera Flexible 1/4" - Recto TG 1/4" - Esférica 1/4" - L=720 mm, Pmin=250 Bars | 1 |
| 3.27 |  | 130-08-08-00023 | DEPOSITO HIDRAULICO MC650 & MC550 | 1 |

## A3. Encoder Group

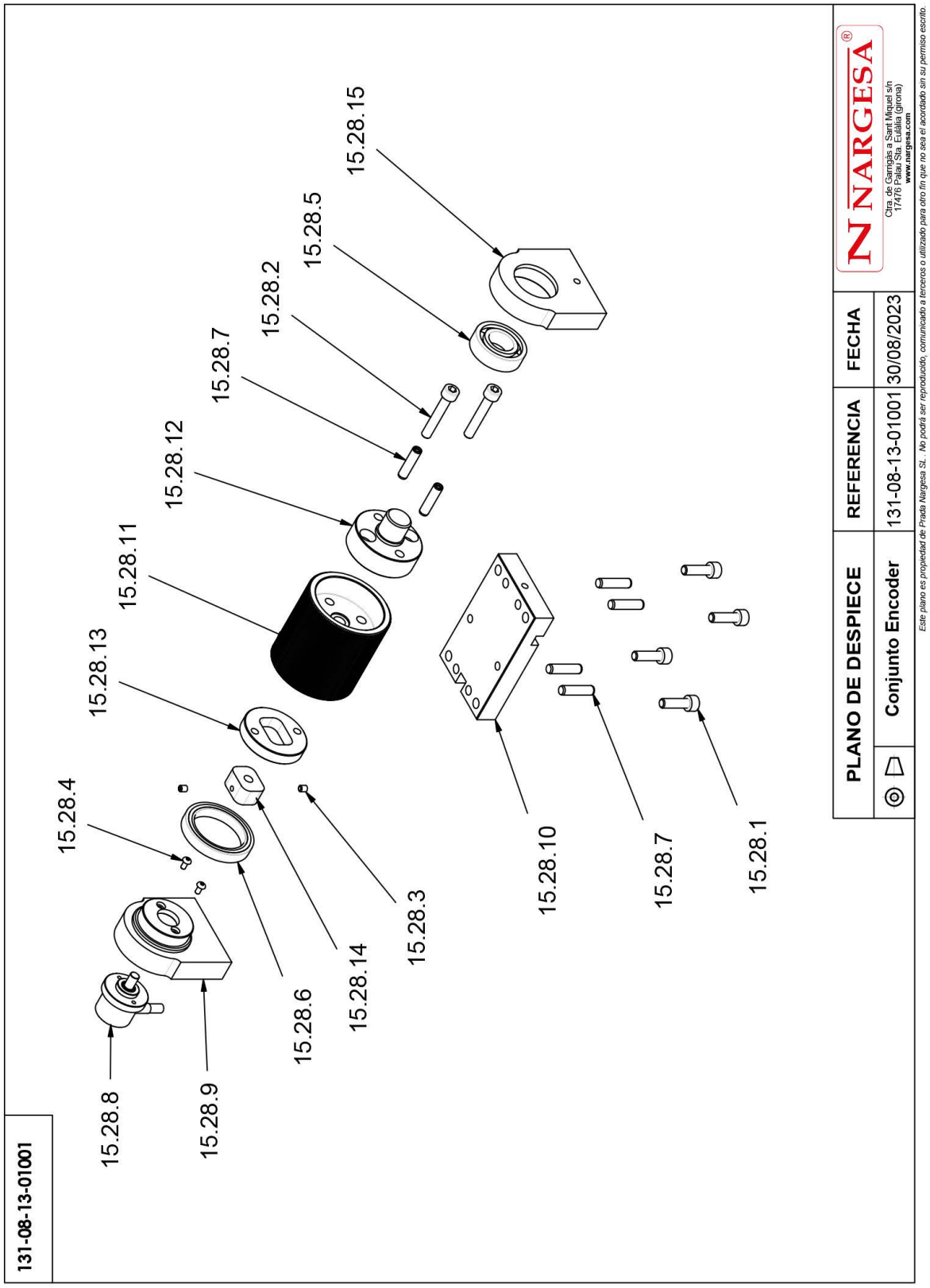


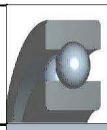
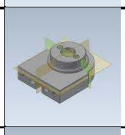
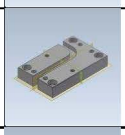
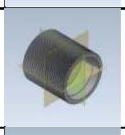
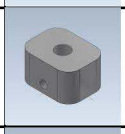
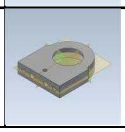

Este plano es propiedad de Prada Nargesa SL . No podrá ser reproducido, comunicado a terceros o utilizado para otro fin que no sea el acordado sin su permiso escrito.

| Elemento | Miniatura | Nº de pieza | Descripción | CTDAD |
|---|---|---|---|---|
| 15.1 |  | 020-D912-M5X16 | TORNILLO ALLEN DIN 912 M5X16 | 8 |
| 15.2 |  | 020-D912-M6X16 | Tornillo Allen DIN912 M6X16 | 7 |
| 15.3 |  | 020-D912-M6X20 | Tornillo Allen DIN912 M6X20 | 8 |
| 15.4 |  | 020-D912-M6X25 | Tornillo Allen DIN912 M6X25 | 2 |
| 15.5 |  | 020-D912-M6X30 | Tornillo Allen DIN912 M6X30 | 2 |
| 15.6 |  | 020-D7984-M5X10 | Tormillo Allen Cabeza Reducida Din7984 M5X10 | 2 |
| 15.7 |  | 020-D7985-M3X4 | Tornillo DIN7985 M3X4 Philips | 4 |
| 15.8 |  | 020-D7991-M6X20 | Tornillo Allen Avellanado DIN7991 M6X20 | 5 |
| 15.9 |  | 030-CJ-00047 | Cojinete Deslizamiento Lineal con Brida Cuadrada Ref. KBK 25-PP | 2 |
| 15.10 |  | 030-D7979D-00009 | Pasador Cilindrico Con Rosca Int. DIN7979/D D6X24 | 2 |
| 15.11 |  | 030-DP-00010 | Casquillo Bronce D16xD22x20 | 2 |
| 15.12 |  | 031-MAP-00001 | Manilla Giratoria Plegable 136 M10x15 | 1 |
| 15.13 |  | 031-POS-00013 | MINI POSICIONADOR DE MUELLE SIN BLOQUEO Ø7 - M10X1 | 1 |
| 15.14 |  | 031-RGC-00002 | ESORTE DE GAS LIFT 8/18 FUERZA 200 N CARRERA 160 mm REF. 08 400 20 | 1 |

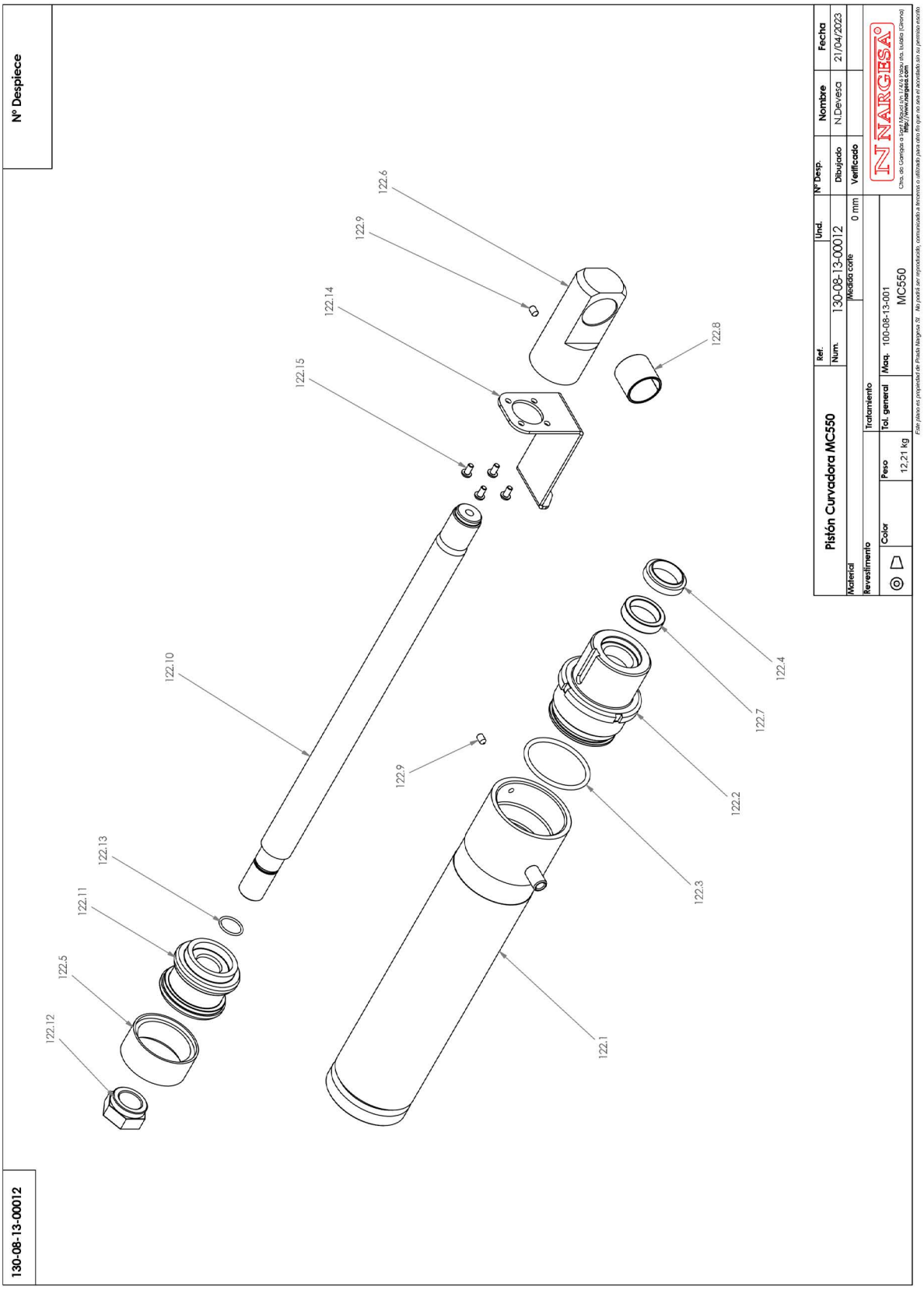
| Elemento | Miniatura | Nº de pieza | Descripción | CTDAD |
|---|---|---|---|---|
| 15.15 |  | 125-08-13-01007 | Placa Fijación | 1 |
| 15.16 |  | 125-08-13-01008 | Soporte Principal | 1 |
| 15.17 |  | 125-08-13-01009 | Eje Guiado Posterior | 1 |
| 15.18 |  | 125-08-13-01010 | Eje Guiado Frontal | 1 |
| 15.19 |  | 125-08-13-01011 | Base Fijación Conjunto Encoder | 1 |
| 15.20 |  | 125-08-13-01012 | Fijación Trasera Cadena Portacables | 1 |
| 15.21 |  | 125-08-13-01013 | Cadena Portacables Serie 05 | 1 |
| 15.22 |  | 125-08-13-01014 | Tope Fijación Resorte Gas | 1 |
| 15.23 |  | 125-08-13-01015 | Pletina Guiado Posicionador | 1 |
| 15.24 |  | 125-08-13-01016 | Grueso Soporte Posicionador | 1 |
| 15.25 |  | 125-08-13-01017 | Soporte Posicionador | 1 |
| 15.26 |  | 125-08-13-01018 | Tope Fijación Resorte Gas | 1 |
| 15.27 |  | 125-08-13-01019 | Placa Soporte | 1 |
| 15.28 |  | 131-08-13-01001 | Conjunto Encoder | 1 |

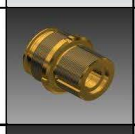
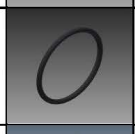
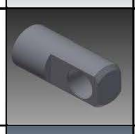
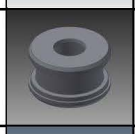
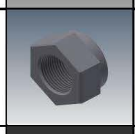
## A4. Encoder


131-08-13-01001
15.28.8
15.28.9
15.28.6
15.28.14
15.28.3
15.28.4
15.28.13
15.28.11
15.28.12
15.28.7
15.28.2
15.28.5
15.28.15
15.28.10
15.28.7
15.28.1
PLANO DE DESPIECE
Conjunto Encoder
REFERENCIA
131-08-13-01001
FECHA
30/08/2023
NARGESA
Ctra. de Garrigàs a Sant Miquel s/n
17476 Palau Sta. Eulàlia (girona)
www.nargesa.com
Este plano es propiedad de Prada Nargesa SL. No podrá ser reproducido, comunicado a terceros o utilizado para otro fin que no sea el acordado sin su permiso escrito.

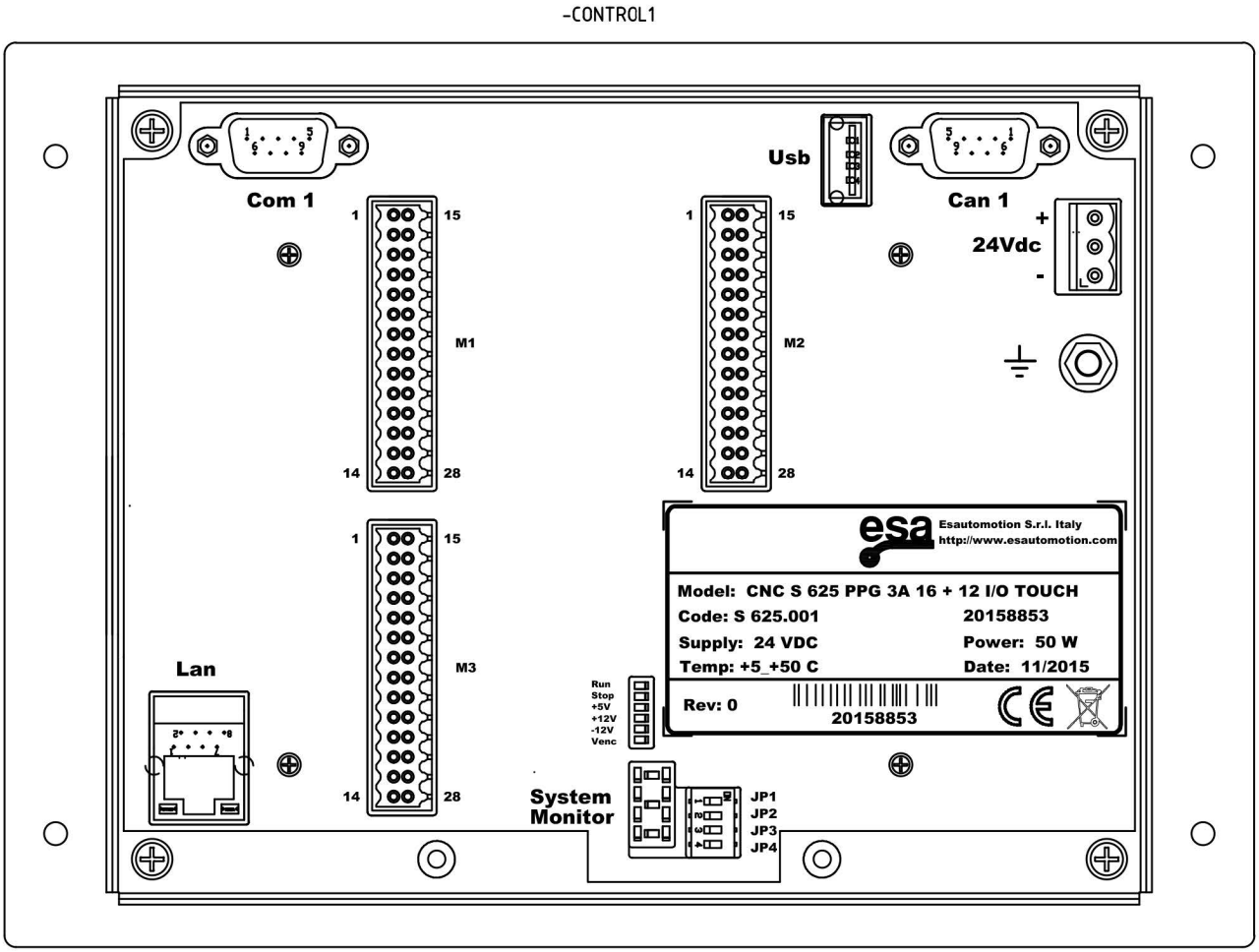
| Elemento | Miniatura | Nº de pieza | Descripción | CTDAD |
|---|---|---|---|---|
| 15.28.1 |  | 020-D912-M6X20 | Tornillo Allen DIN912 M6X20 | 4 |
| 15.28.2 |  | 020-D912-M6X35 | Tornillo Allen DIN912 M6X35 | 2 |
| 15.28.3 |  | 020-D913-M4X5 | ESPARRAGO ALLEN DIN 913 M4X5 | 2 |
| 15.28.4 |  | 020-I7380-M3X6 | TORNILLO ISO 7380 M3X6 | 2 |
| 15.28.5 |  | 030-CJ-00037 | Rodamiento DIN 625 SKF 6003-2RSH | 1 |
| 15.28.6 |  | 030-CJ-00042 | Rodamiento de Bolas 61807-2RS D47XD35X7 | 1 |
| 15.28.7 |  | 030-D7979D-00009 | Pasador Cilindrico Con Rosca Int. DIN7979/D D6X24 | 6 |
| 15.28.8 |  | 050-ENC-00012 | Encoder Incremental Hohner 27-2222-4096 | 1 |
| 15.28.9 |  | 125-08-13-01000 | Soporte Encoder | 1 |
| 15.28.10 |  | 125-08-13-01001 | Base Rodillo Cuentavueltas | 1 |
| 15.28.11 |  | 125-08-13-01002 | Rodillo Grafilado | 1 |
| 15.28.12 |  | 125-08-13-01003 | Eje Rodillo Grafilado/ Encoder | 1 |
| 15.28.13 |  | 125-08-13-01004 | Eje Rodillo Grafilado | 1 |
| 15.28.14 |  | 125-08-13-01005 | Tuerca Arrastre Eje Encoder | 1 |
| 15.28.15 |  | 125-08-13-01006 | Soporte Encoder | 1 |

## A5. Hydraulic cylinder

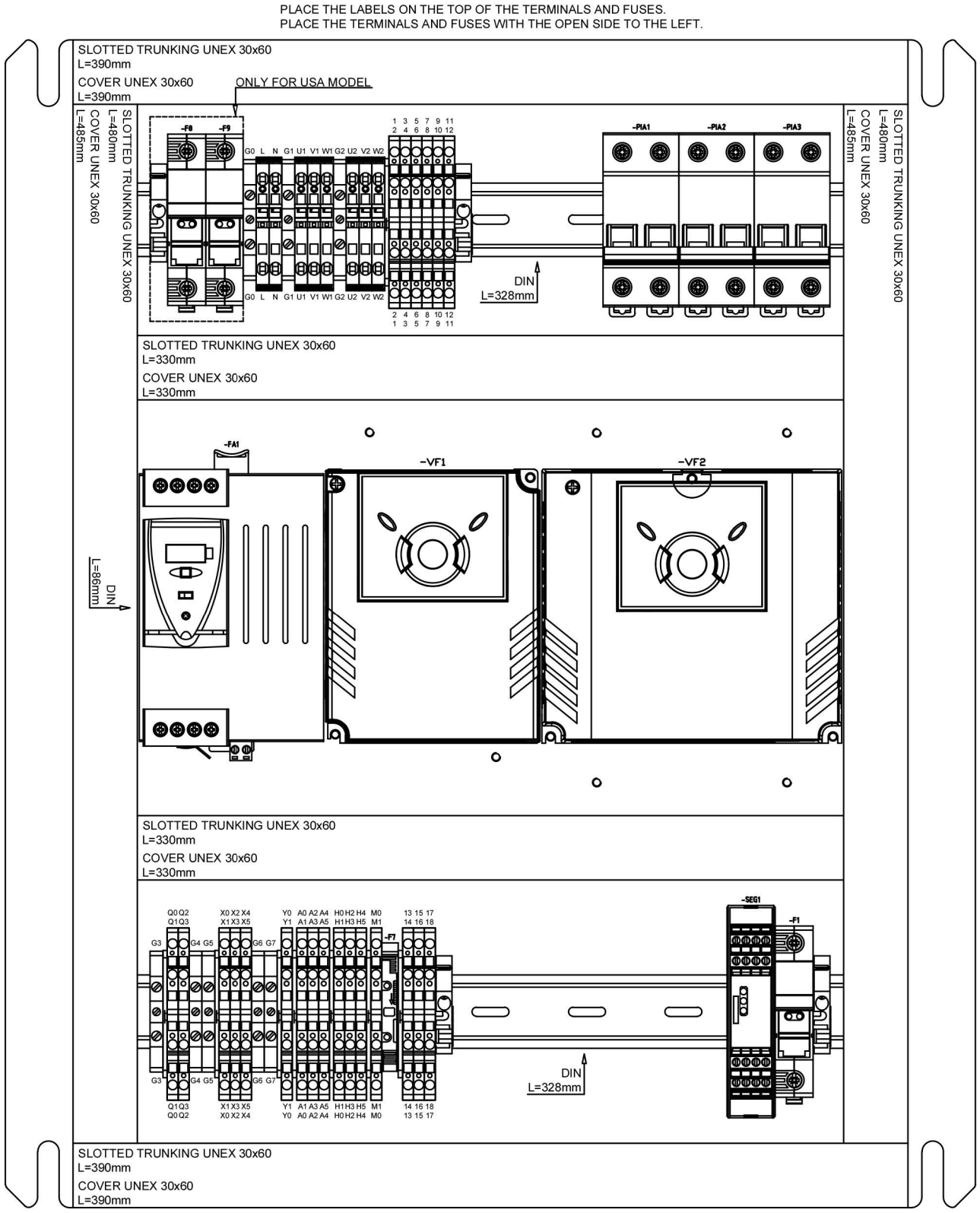


| Elemento | Miniatura | Nº de pieza | Descripción | CTDAD |
|---|---|---|---|---|
| 122.1 |  | 130-08-13-00011 | Conjunto Camisa del Pistón | 1 |
| 122.2 |  | 120-08-13-00050 | Tuerca Cierre Vástago | 1 |
| 122.3 |  | 040-JT-00036 | JUNTA TORICA D58X4 90 Shore | 1 |
| 122.4 |  | 040-RAS-00012 | Rascador AS - D30XD40X7/10 | 1 |
| 122.5 |  | 040-DPS-00008 | Junta DPS D65XD53 SIMKO 320X2 | 1 |
| 122.6 |  | 120-08-13-00057 | Cabeza del Vástago del Pistón | 1 |
| 122.7 |  | 040-BA-00019 | Collarín T20 30x40x10 | 1 |
| 122.8 |  | 030-DP-00013 | DOLLA PARTIDA D30XD34X30 | 1 |
| 122.9 |  | 020-D914-M6X10 | Esparrago Allen Con Punta DIN 914 M6x10 | 2 |
| 122.10 |  | 120-08-13-00131 | Cromado Vástago del Pistón | 1 |
| 122.11 |  | 120-08-13-00130 | Émbolo Pistón | 1 |
| 122.12 |  | 120-08-13-00132 | Tuerca Trasera Cilindro Hex. 36mm - M24x1.5 | 1 |
| 122.13 |  | 040-JT-00037 | JUNTA TORICA D20X2 NBR 90 Sh | 1 |
| 122.14 |  | 120-08-13-00109 | Chapa de Amarre del Encoder al Vástago | 2 |
| 122.15 |  | 020-I7380-M5x10 | TORNILLO ISO 7380 M5X10 | 8 |

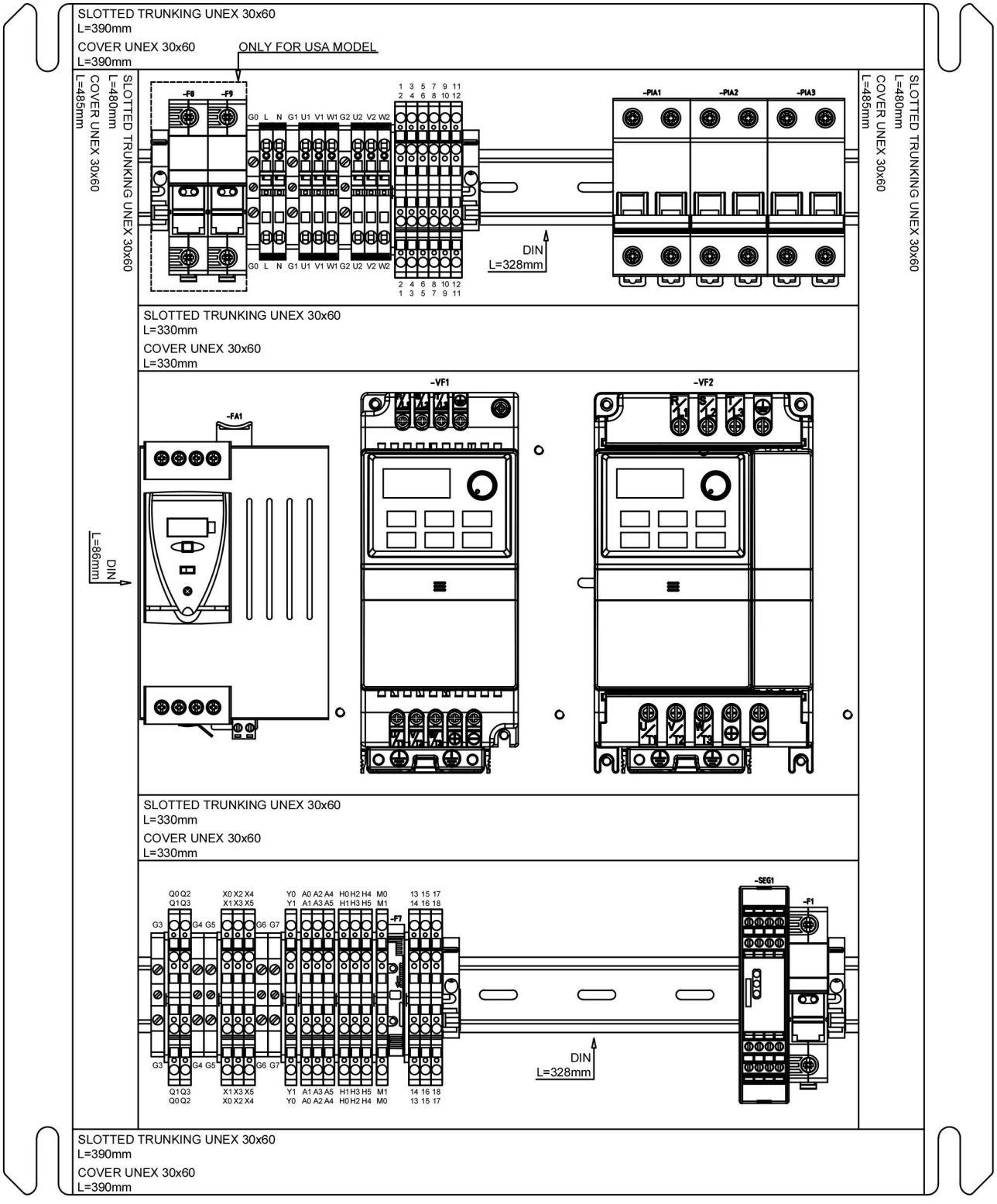
## A6. Control panel

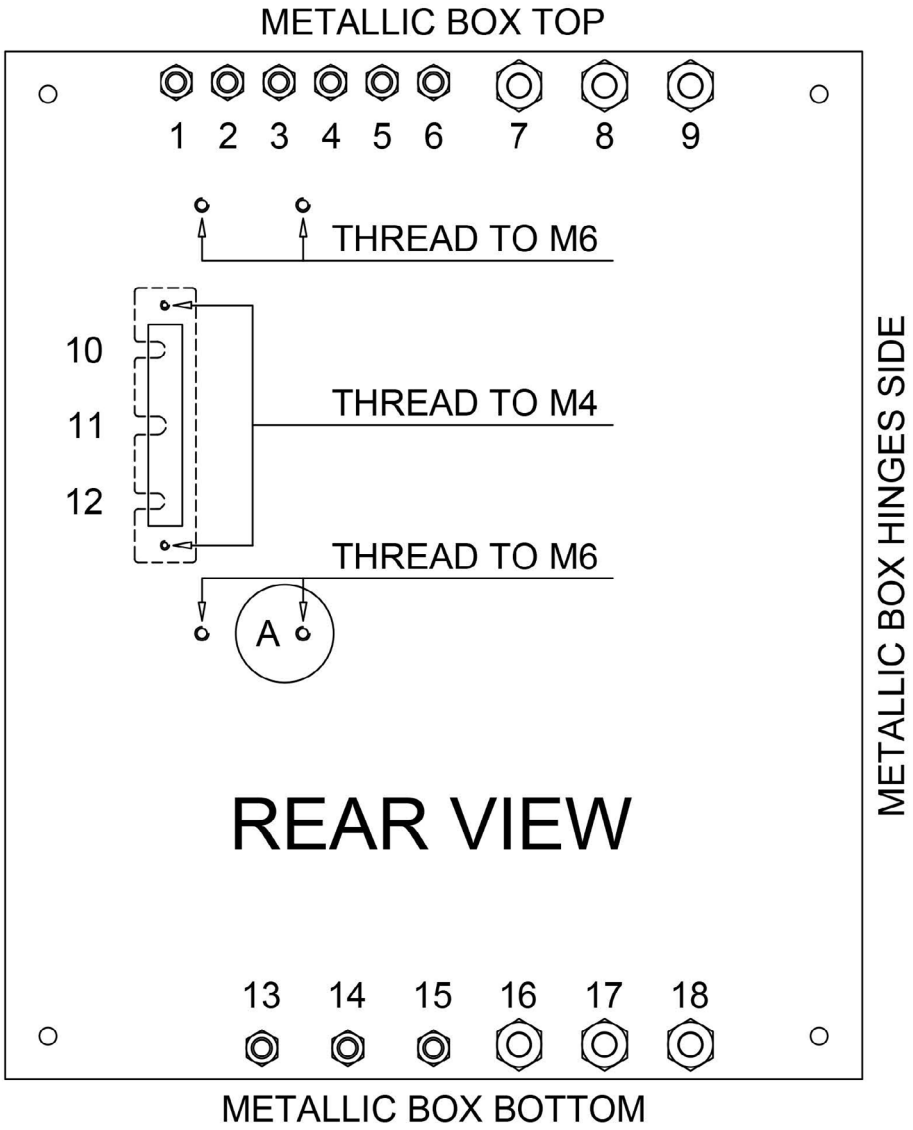


## A7. Electric boxes



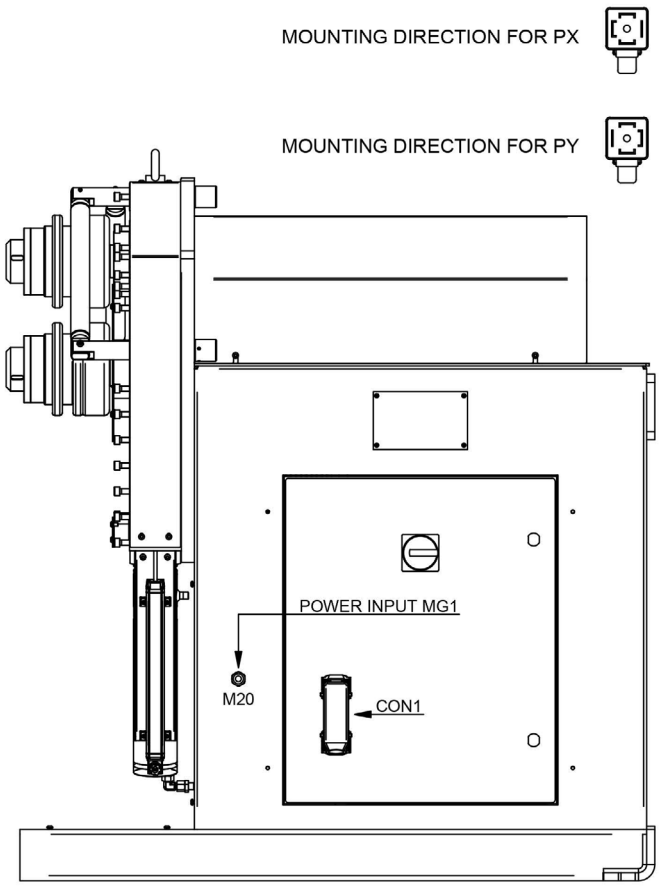
PLACE THE LABELS ON THE TOP OF THE TERMINALS AND FUSES.
PLACE THE TERMINALS AND FUSES WITH THE OPEN SIDE TO THE LEFT.

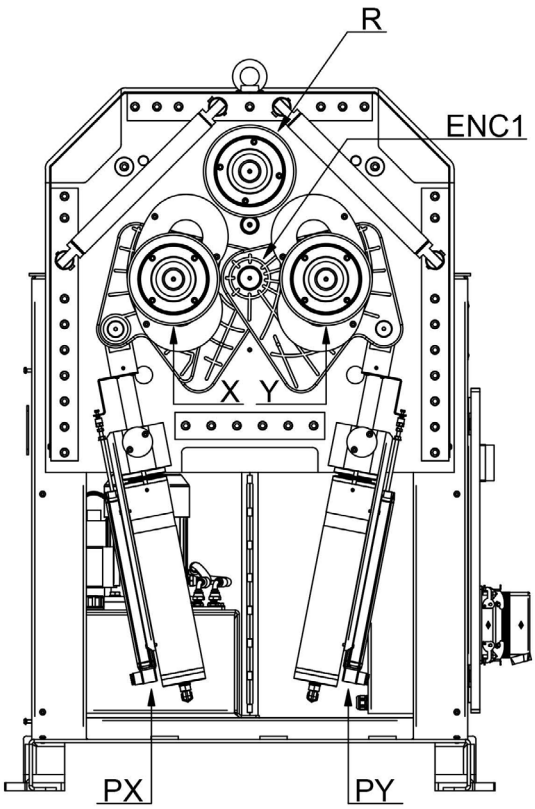





| NUMBER | PLASTIC CABLE GLAND | ELECTRIC WIRE | DESCRIPTION |
|---|---|---|---|
| 1 | PG9 | -MG4 | EVP (PRESSURE ELECTROVALVE) |
| 2 | PG9 | -MG5 | EVUX (X AXIS UP ELECTROVALVE) |
| 3 | PG9 | -MG6 | EVDX (X AXIS DOWN ELECTROVALVE) |
| 4 | PG9 | -MG7 | EVUY (Y AXIS UP ELECTROVALVE) |
| 5 | PG9 | -MG8 | EVDY (Y AXIS DOWN ELECTROVALVE) |
| 6 | PG9 | --- | --- |
| 7 | M20 | -MG3 | ROLLER MOTOR |
| 8 | M20 | -MG2 | PUMP MOTOR |
| 9 | M20 | -MG1 | POWER INPUT |
| 10 | --- | --- | --- |
| 11 | --- | --- | --- |
| 12 | --- | --- | --- |
| 13 | PG9 | --- | --- |
| 14 | PG9 | --- | --- |
| 15 | PG9 | -MG15 | PH1 (MATERIAL PHOTOCELL) |
| 16 | M20 | -MG20 | ENC1 (R AXIS ROTARY ENCODER) |
| 17 | M20 | -MG12 | PX (X AXIS 5K LINEAR POTENTIOMETER) |
| 18 | M20 | -MG13 | PY (Y AXIS 5K LINEAR POTENTIOMETER) |

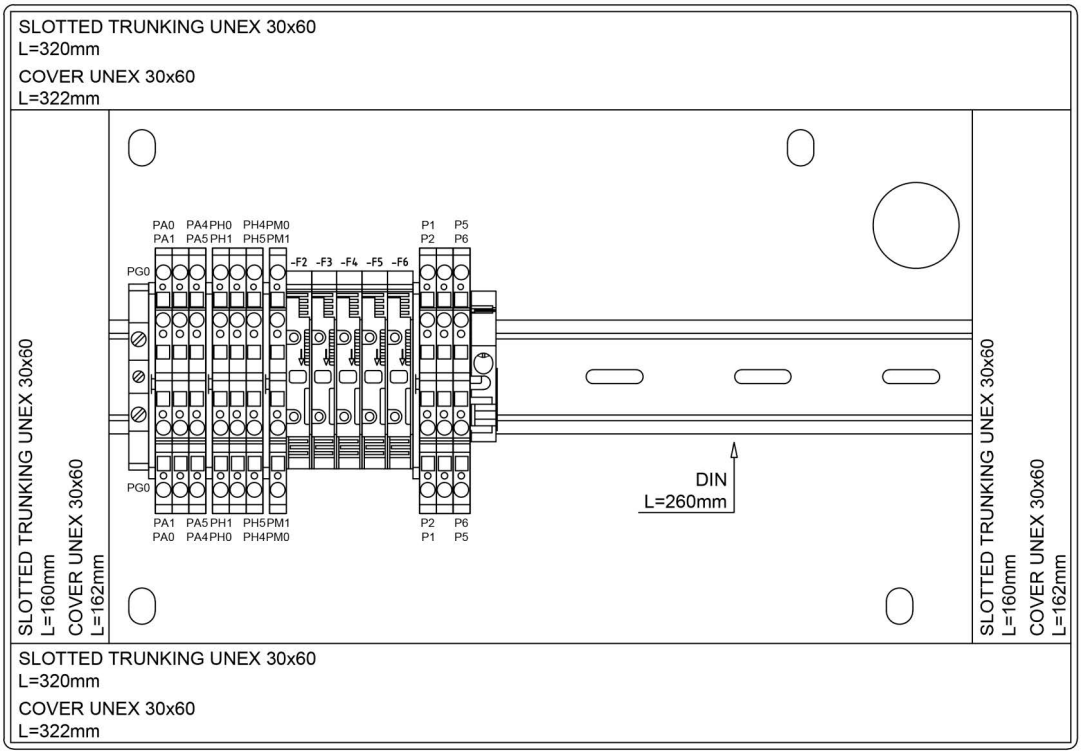
## A8. Arrangement of axes



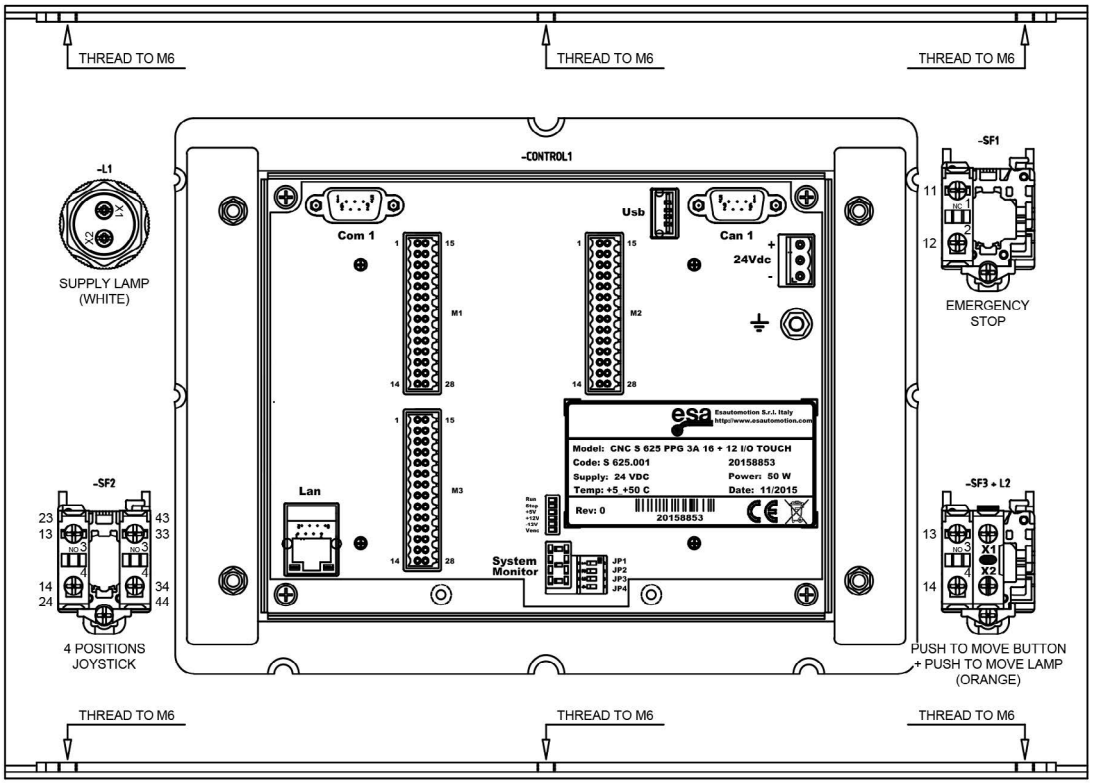



## A9. Control unit

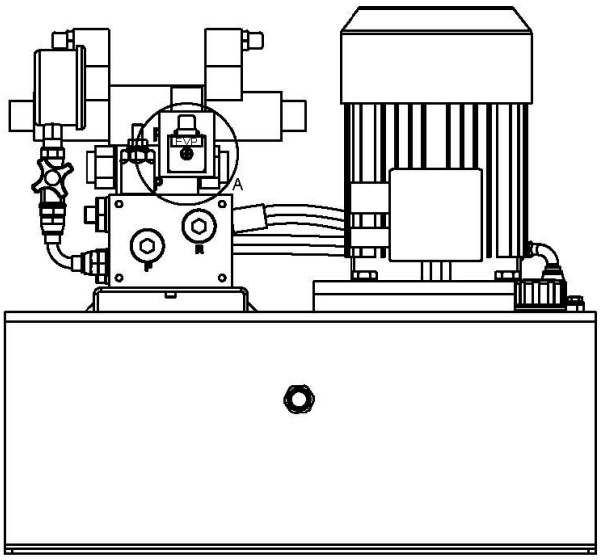
PLACE THE LABELS ON THE TOP OF THE TERMINALS AND FUSES.
PLACE THE TERMINALS AND FUSES WITH THE OPEN SIDE TO THE LEFT.




USER CONTROL INNER VIEW

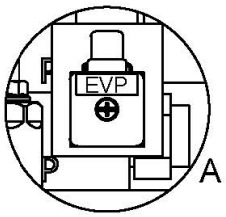


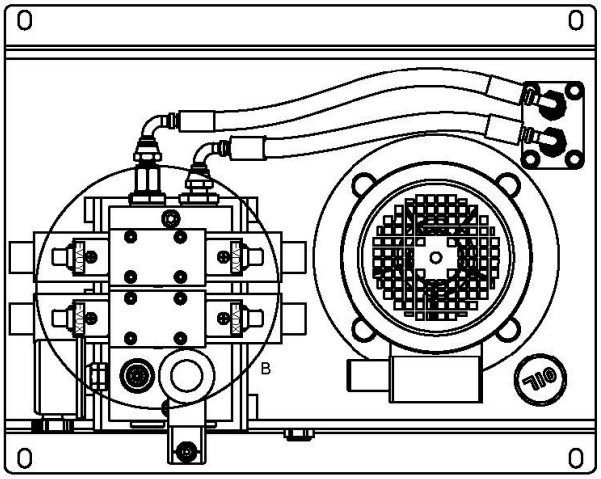
## A10. Hydraulic group

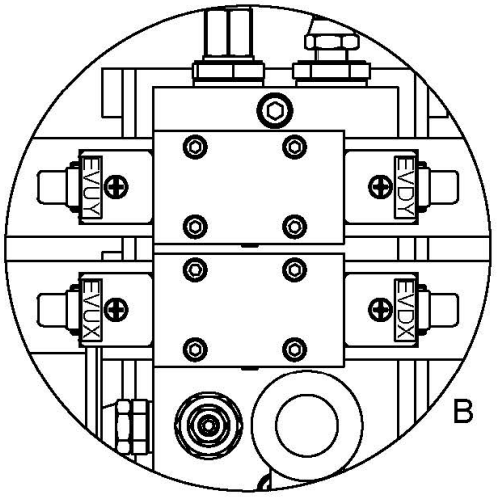



MOUNTING DIRECTION FOR ALL VALVES

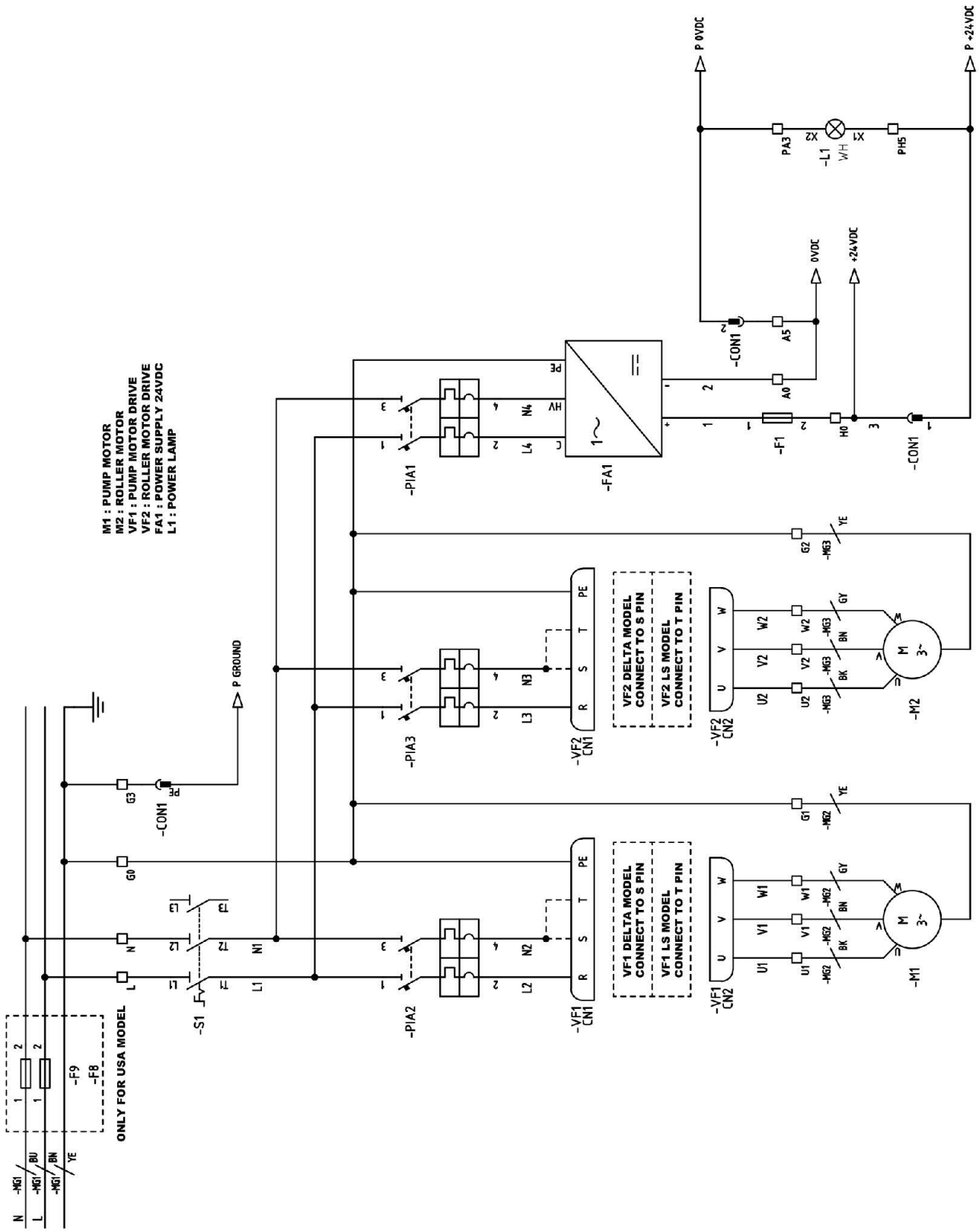
NOTE: ADJUST THE PRESSURE LIMITER TO 150 BAR

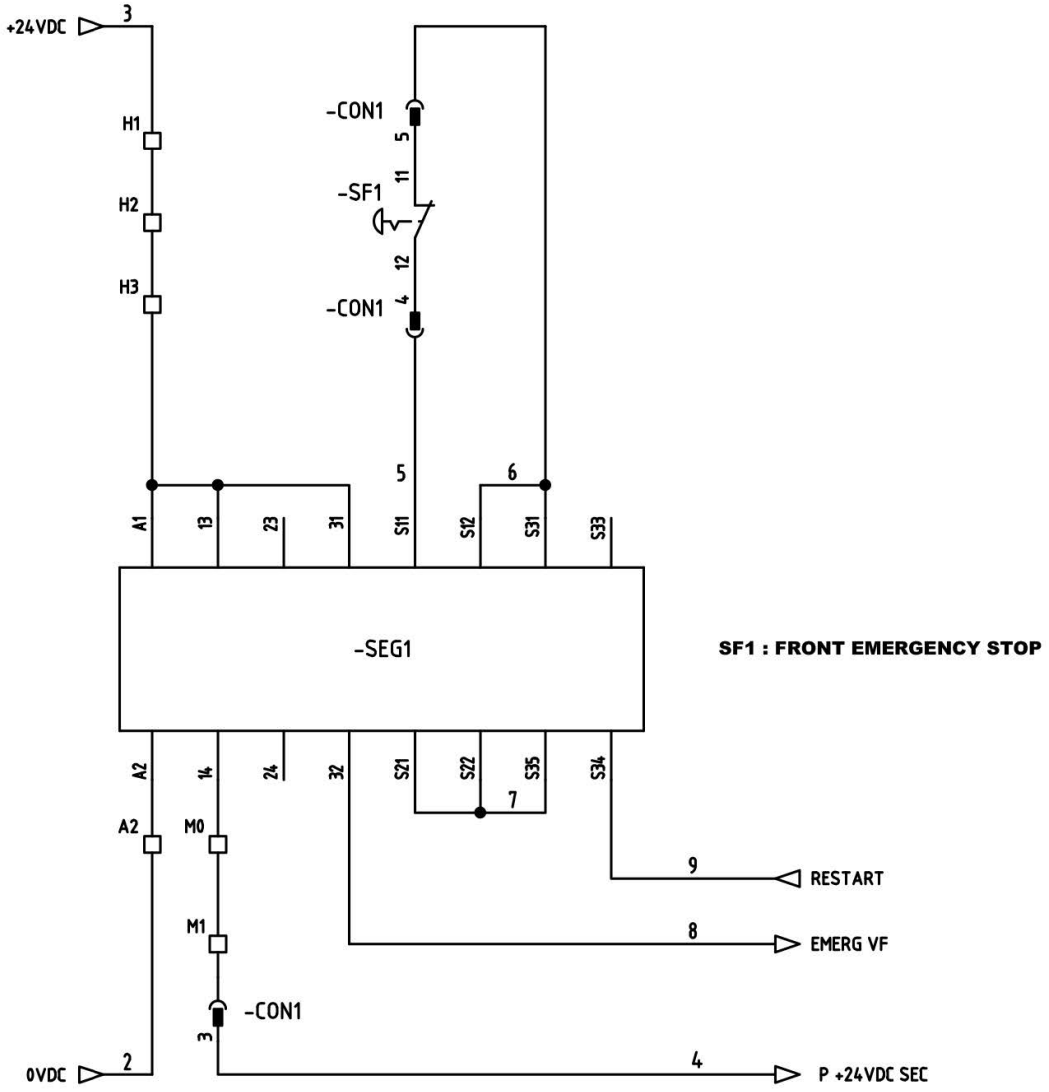


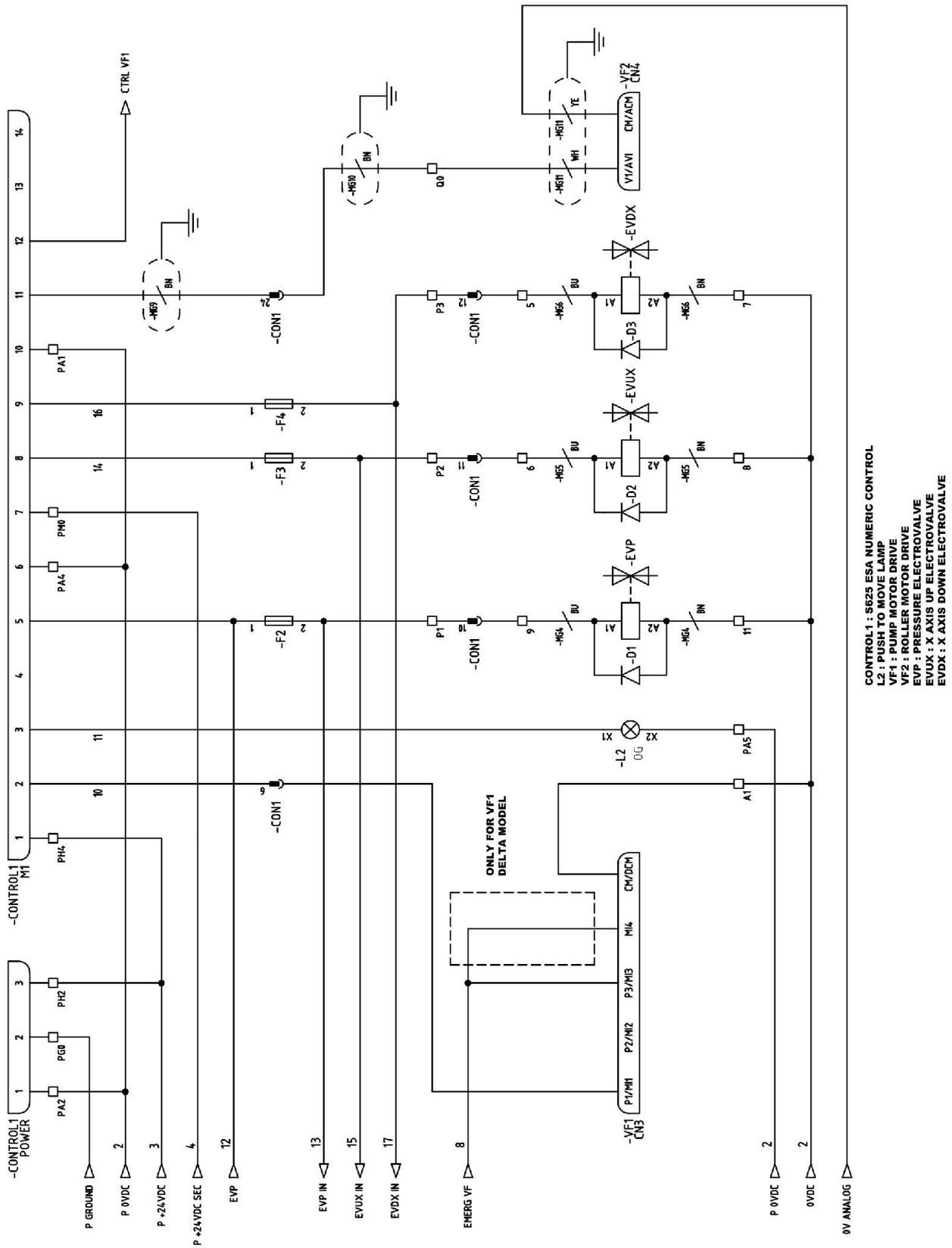



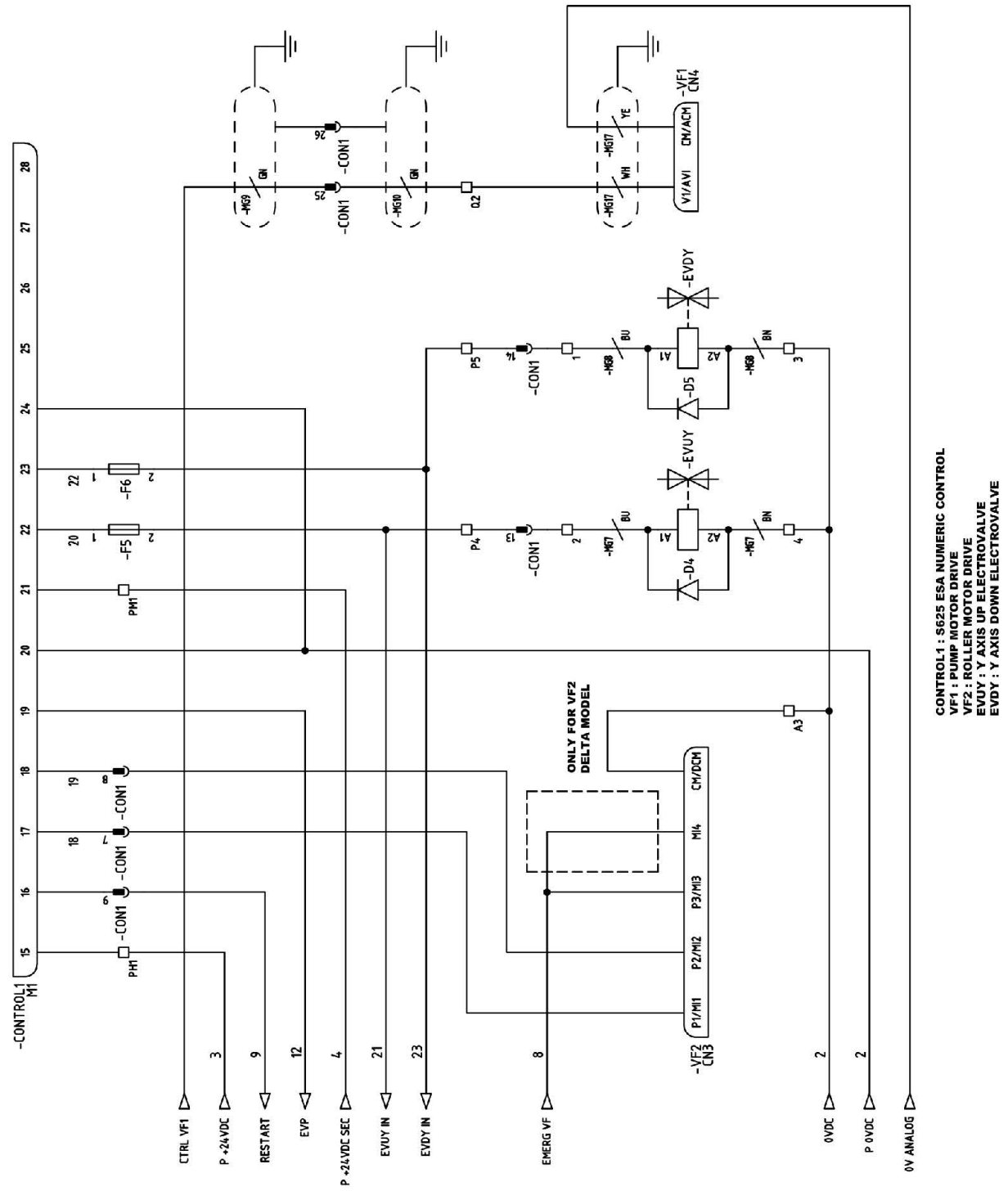



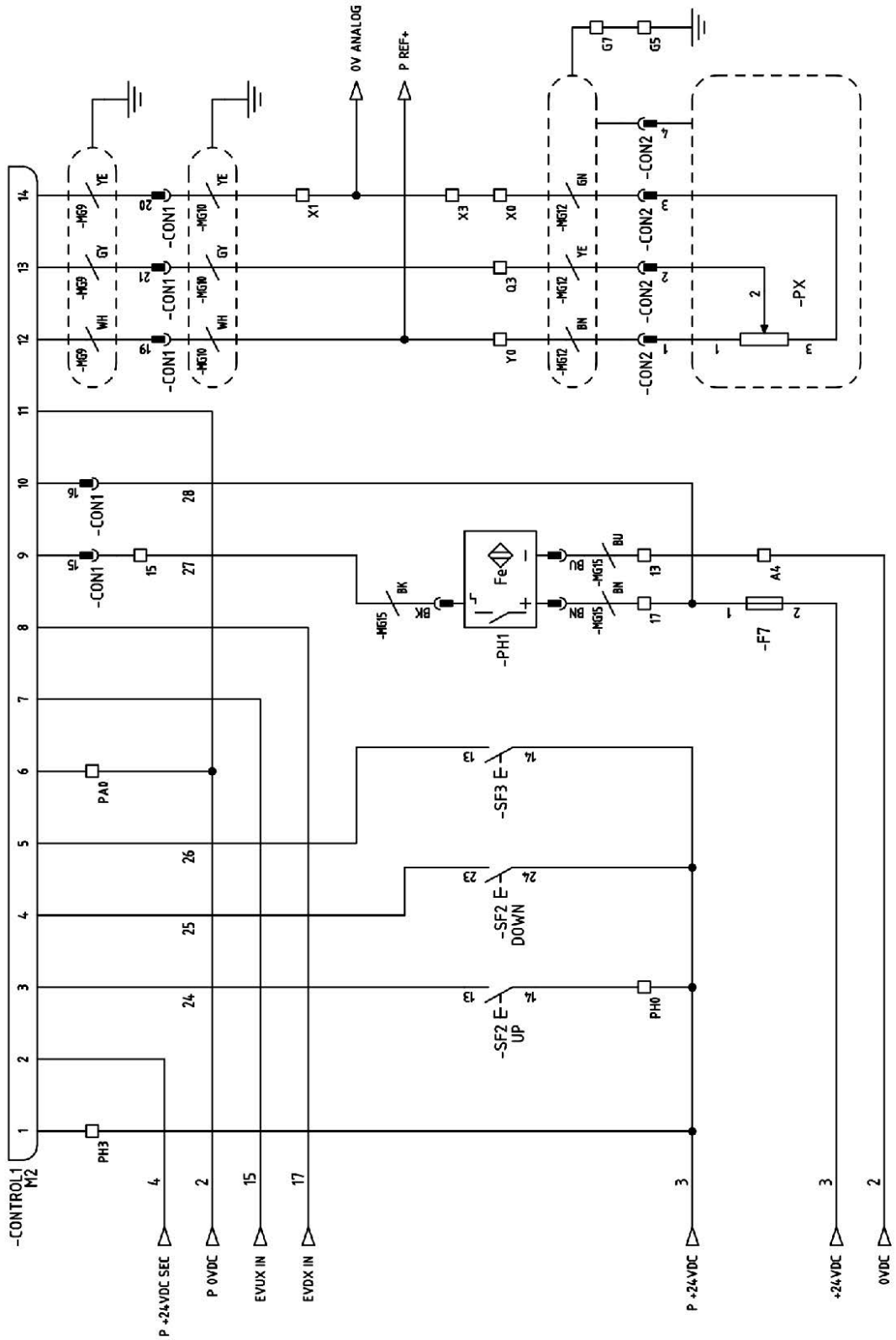
## A11. Electric maps

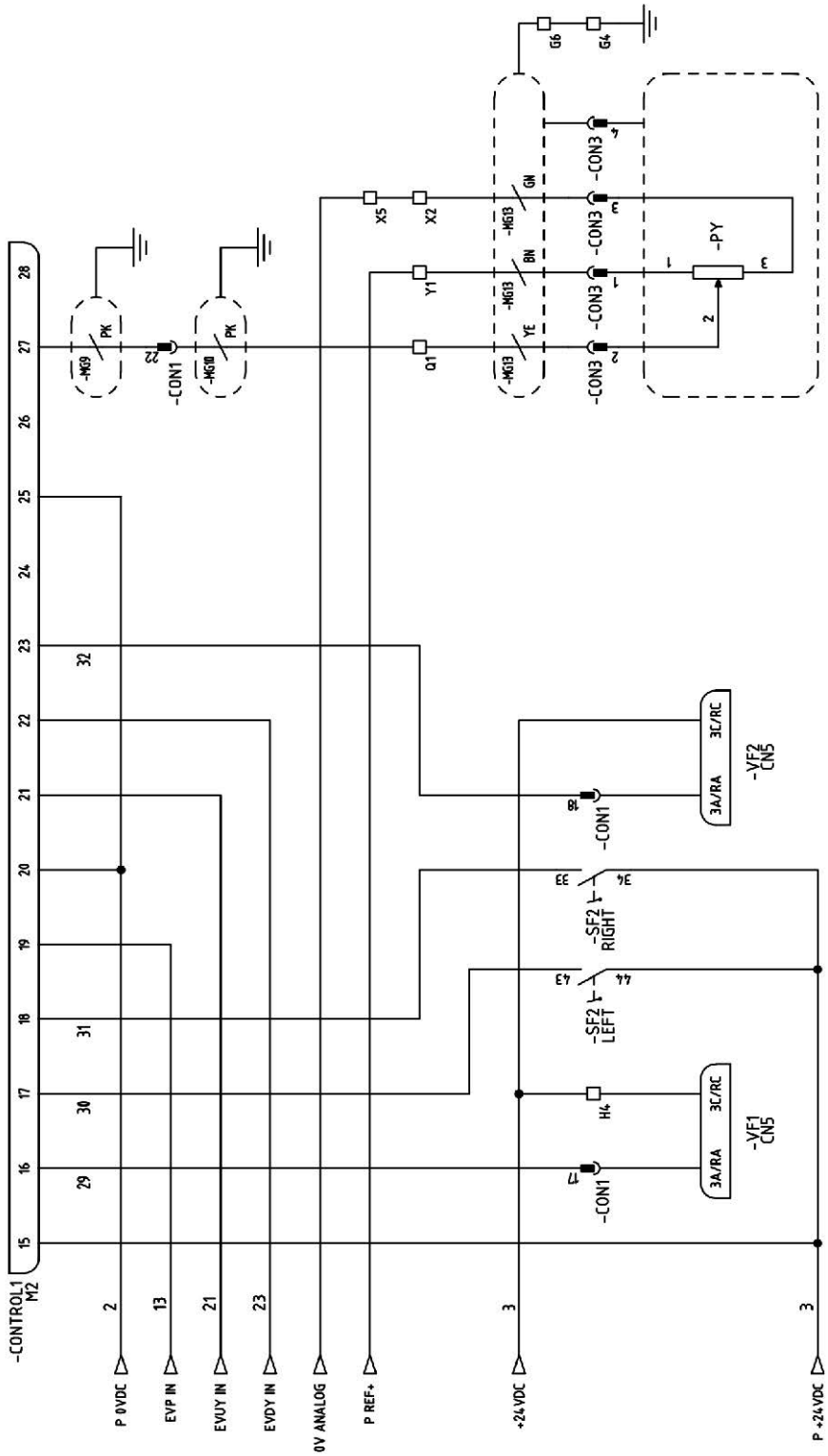


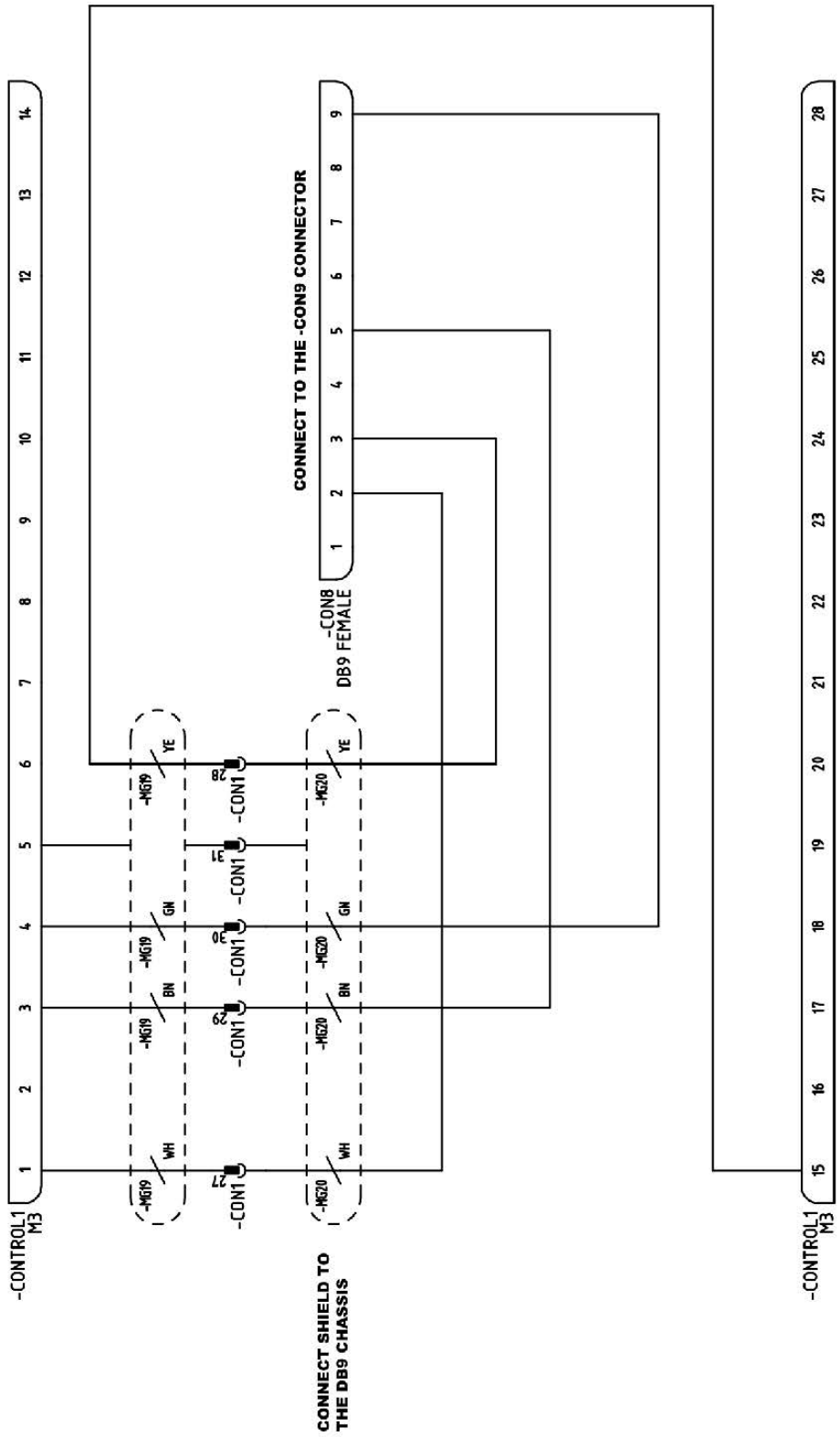

+24VDC
3
H1
H2
H3
-CON1
5
11
-SF1
12
-CON1
4
5
6
A1
13
23
31
S11
S12
S31
S33
-SEG1
SF1 : FRONT EMERGENCY STOP
A2
14
24
32
S21
S22
S35
S34
7
A2
M0
9
RESTART
M1
8
EMERG VF
-CON1
3
0VDC
2
4
P +24VDC SEC


CONTROL1 : S625 ESA NUMERIC CONTROL
L2 : PUSH TO MOVE LAMP
VF1 : PUMP MOTOR DRIVE
VF2 : ROLLER MOTOR DRIVE
EVP : PRESSURE ELECTROVALVE
EVUX : X AXIS UP ELECTROVALVE
EVDX : X AXIS DOWN ELECTROVALVE
ONLY FOR VF1 DELTA MODEL
-CONTROL1 POWER
-CONTROL1 M1
CTRL VF1
P GROUND
P 0VDC
P +24VDC
P +24VDC SEC
EVP
EVP IN
EVUX IN
EVDX IN
EMERG VF
P 0VDC
0VDC
0V ANALOG
-CON1
-F1
-F2
-F3
-F4
-D1
-D2
-D3
-EVP
-EVUX
-EVDX
-L2
-VF1 CN3
-VF2 CN4

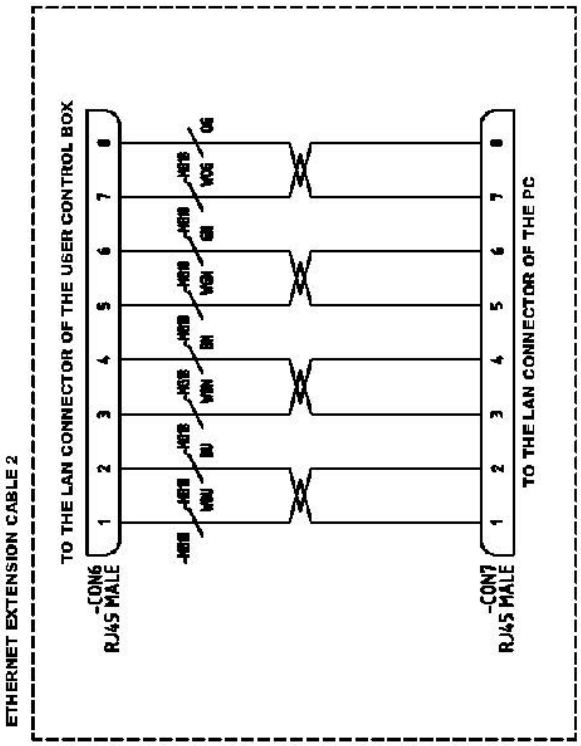

-CONTROL1
M1
-CON1
PH1
-F6
-F5
-MG9
-MG10
-MG17
-VF1
CN4
V1/AV1
CM/ACM
-EVDY
-EVUY
-D5
-D4
-MG8
-MG7
-VF2
CN3
P1/MI1
P2/MI2
P3/MI3
MI4
CM/DCM
ONLY FOR VF2
DELTA MODEL
CTRL VF1
P +24VDC
RESTART
EVP
P +24VDC SEC
EVUY IN
EVDY IN
EMERG VF
0VDC
P 0VDC
0V ANALOG
CONTROL1 : S625 ESA NUMERIC CONTROL
VF1 : PUMP MOTOR DRIVE
VF2 : ROLLER MOTOR DRIVE
EVUY : Y AXIS UP ELECTROVALVE
EVDY : Y AXIS DOWN ELECTROVALVE

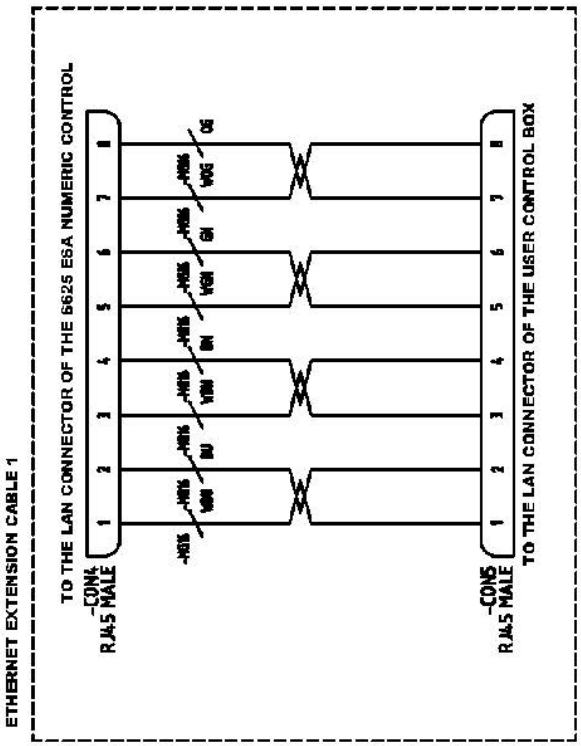

-CONTROL1
M2
PH3
PA0
PH0
-CON1
-CON2
-MG9
-MG10
-MG12
-MG15
-SF2 E
UP
-SF2 E
DOWN
-SF3 E
-PH1
-F7
-PX
X1
X3
X0
Y0
Q3
0V ANALOG
P REF+
G7
G5
A4
P +24VDC SEC
P 0VDC
EVUX IN
EVDX IN
P +24VDC
+24VDC
0VDC
CONTROL1 : 3625 ESA NUMERIC CONTROL
SF2 : JOYSTICK
SF3 : PUSH TO MOVE BUTTON
PH1 : MATERIAL PHOTOCELL
PX : X AXIS 5K LINEAR POTENTIOMETER

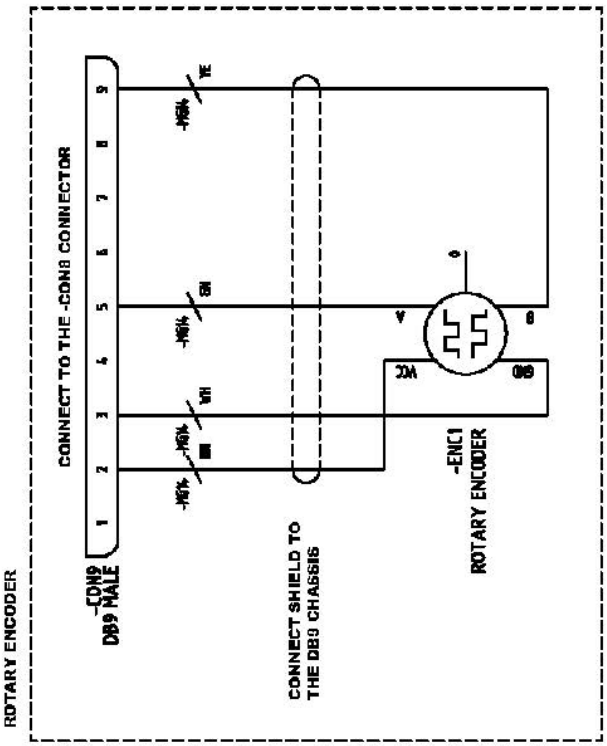

-CONTROL1
M2
P 0VDC
EVP IN
EVUY IN
EVDY IN
0V ANALOG
P REF+
+24VDC
P +24VDC
-CON1
-VF1
CN5
-VF2
CN5
-SF2
LEFT
-SF2
RIGHT
-MG9
-MG10
-MG13
-CON3
-PY
CONTROL1 : S625 ESA NUMERIC CONTROL
VF1 : PUMP MOTOR DRIVE
VF2 : ROLLER MOTOR DRIVE
SF2 : JOYSTICK
PY : Y AXIS 5K LINEAR POTENTIOMETER



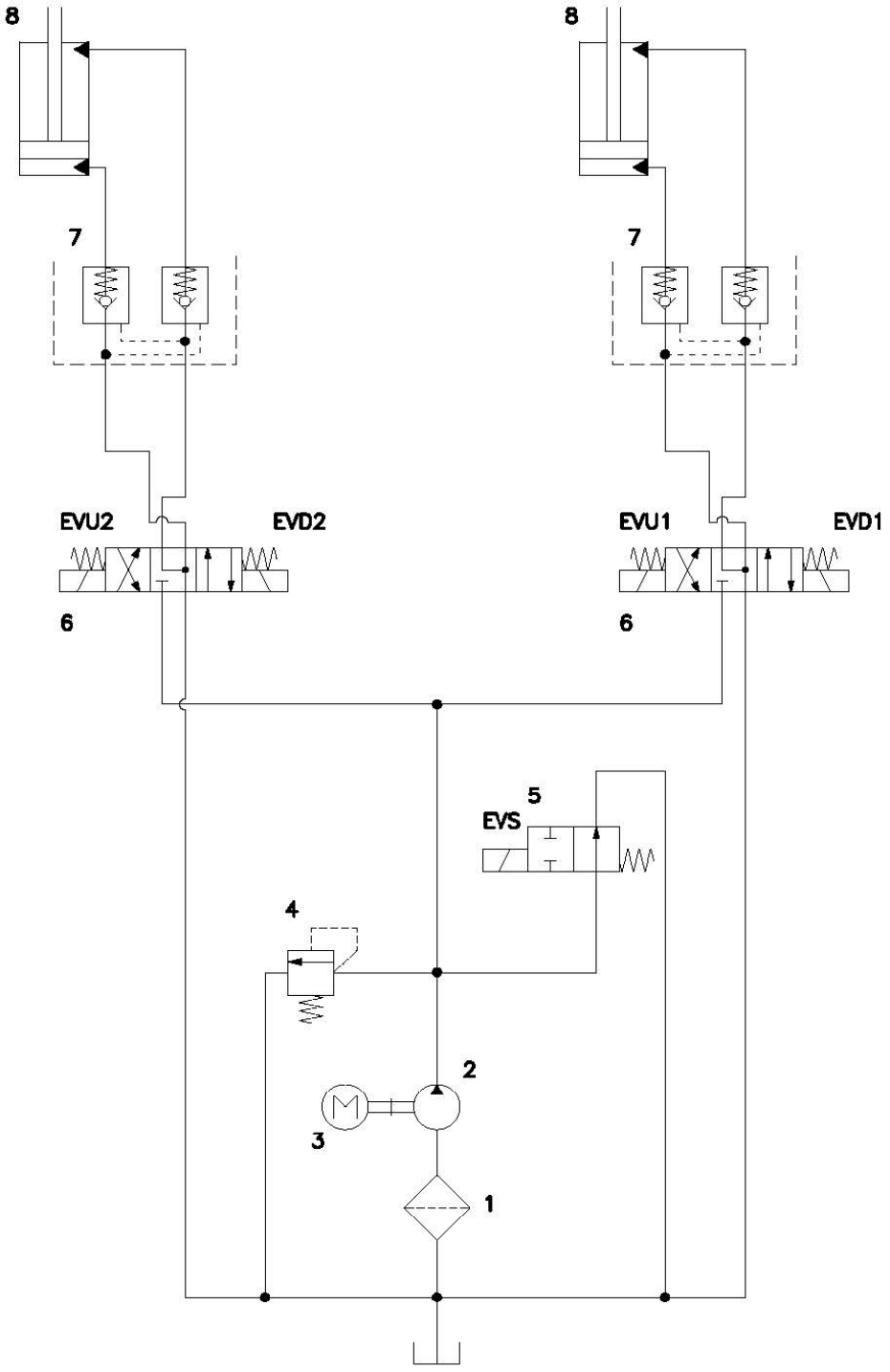

CONTROL1 : S625 ESA NUMERIC CONTROL


ETHERNET EXTENSION CABLE 2
TO THE LAN CONNECTOR OF THE USER CONTROL BOX
-CON6
RJ45 MALE
-CON7
RJ45 MALE
TO THE LAN CONNECTOR OF THE PC


ETHERNET EXTENSION CABLE 1
TO THE LAN CONNECTOR OF THE 6625 E6A NUMERIC CONTROL
-CON4
RJ45 MALE
-CON5
RJ45 MALE
TO THE LAN CONNECTOR OF THE USER CONTROL BOX


ROTARY ENCODER
CONNECT TO THE -CON8 CONNECTOR
-CON8
DB9 MALE
CONNECT SHIELD TO
THE DB9 CHASSIS
-ENC1
ROTARY ENCODER

## A12. Hydraulic map




1. Suction filter 3/8'
2. Hydraulic pump 1.5L
3. 0.75Kw electric motor
4. Pressure relief valve
5. Solenoid valve 3/2 spring return
6. Solenoid valve 4/3 center with circulation
7. Double pilot operated non-return valve
8. Double acting cylinders

# OUR RANGE OF MACHINERY



IRON WORKERS



NON-MANDREL PIPE BENDERS



HORIZONTAL PRESS BRAKES



SECTION BENDING MACHINES



CNC PIPE BENDERS



LASER WELDING EQUIPMENTS



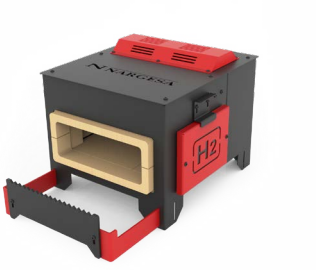
TWISTING/SCROLL BENDING MACHINES



HYDRAULIC PRESS BRAKES



HYDRAULIC SHEAR MACHINES



GAS FORGES



IRON EMBOSSING MACHINES



END WROUGHT IRON MACHINES



BROACHING MACHINES



POWER HAMMERS



BLACKSMITH FORGING PRESS